2026-7

KINSHOFER GROUP COMPANY

RF

Products for

Rail Construction and Maintenance

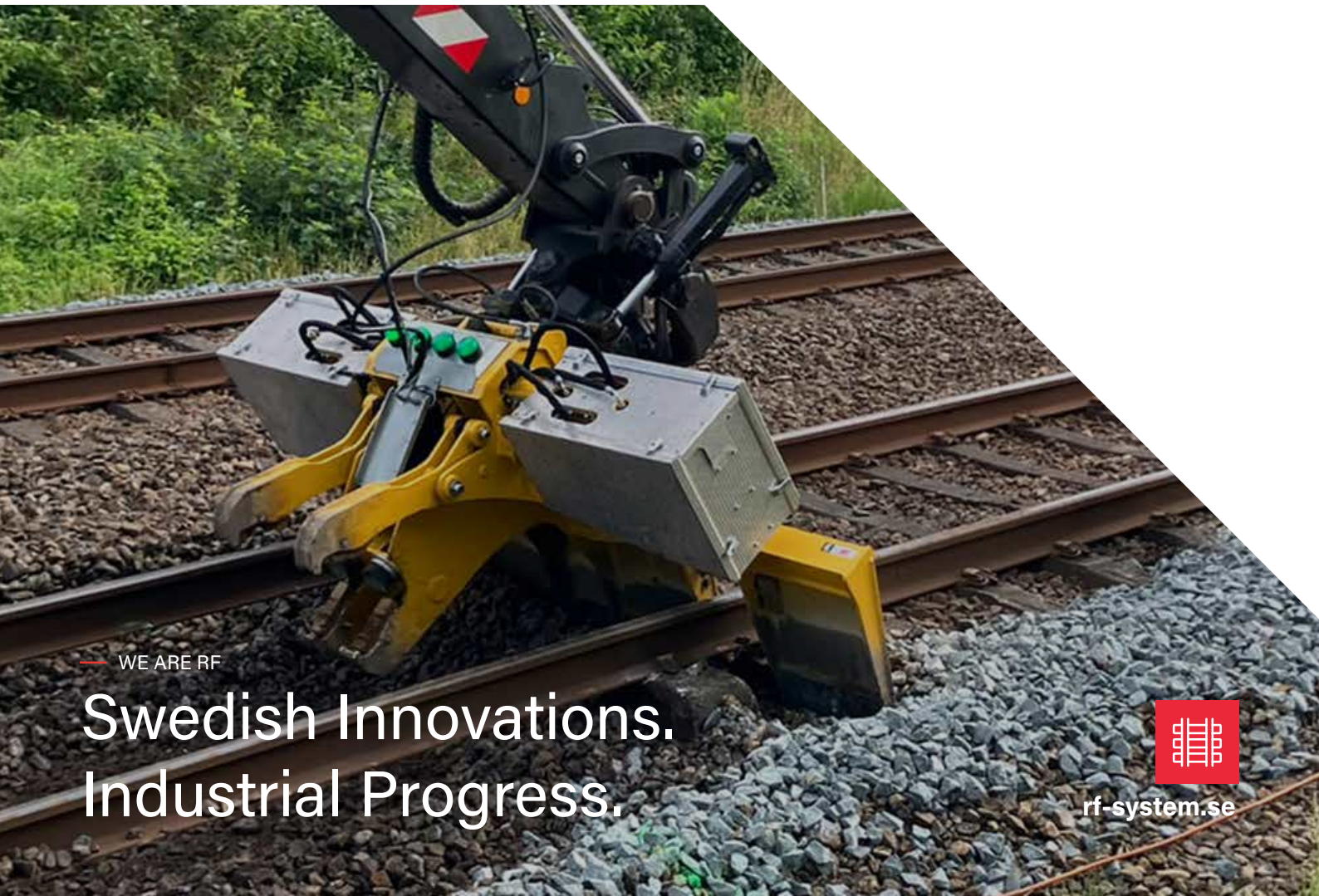

WE ARE RF

Swedish Innovations.
Industrial Progress.

rf-system.se

A wide attachment range for rail and general construction

We are RF.

We are RF - an innovative and driven player manufacturing and delivering high-quality railway, construction, crane, demolition and recycling products.

UNIQUE PRODUCT RANGE

At RF, we develop and create the products we want to work with ourselves. With us, you will find a unique assortment developed by RF and tested by our customers. Many of our innovations are now flagship products in the industry.

OUR WIDE RANGE OF KINSHOFER PRODUCTS

RF is local and based in Sösdala, but simultaneously global, operating in an international market as we are part of the Kinshofer Group. This means we have a wide range of products through our sister companies, with products for every need.

SATISFIED CUSTOMERS ARE OUR TOP PRIORITY

Close customer contact and a high level of service are as important to us as they are to you. That is why our staff is available to help you when needed. You can always feel safe with us as we have a reliable after-sales service for those who have purchased our products.

LARGE SPARE PARTS STOCK AND EXCELLENT AFTERMARKET SUPPORT

Since 1978 we have been operating in Sweden. This means we have long-standing relationshiops with our customers and want them to be able to use their favourite products for as long as possible. Our spare parts stock is extensive and we can offer rare spare parts for many products no longer in production. Feel free to contact us and ask what we have in stock.

+46 44 81707 | sales@rf-system.se | www.rf-system.se

CONTENTS

Railway Equipment for tiltrotator

	Page
Adapter Beam	10
Ballast Broom for gripper cassette	22
Ballast Bucket	42
Ballast Sweeper Roller	18
Ballast Tamper for tiltrotator	8
Cable Trench Lid Grapple	38
Cable Trench Lid Grapple Premium	40
Clamshell Bucket for rigid mount	48
Dozer Blade	46
Exchangeable Shells	50
Levelling Plough	20
Lid Opener	36
Rail Lift on Wheels	28
Rail Manipulator	34
Rotor Brush	44
Sleeper Changer	14
Sleeper Changer w fastclip module	12
Sleeper Grapple	16
Sleeper Layer	32
Sleeper Layer w fastclip module	26
Sleepers Trolley	30
Track Construction Concept	24

Railway Equipment for quick coupler & crane

	Page
Ballast Tamper w integrated Rotation	54
Clamshell Bucket for rigid mount with rotation	72
Clamshell Bucket w exchangeable shells	68, 70
Double Ballast Plough	64
Kinshofer Shell Exchange System	74
Rail Cutter	66
Rail Grapple w HPXdrive	62
Sleeper Changer w integrated rotator	58
Sleeper Changer w integrated rotator HPX	60
Sleeper Layer	56

Other equipment

	Page
Buckets & Others	51
Road/Rail Trailer	76

SMART RAILWAY PRODUCTS CURRENTLY USED ACROSS THE WHOLE WORLD TO BUILD THE INFRASTRUCTURE OF TOMORROW

INNOVATIVE TECHNOLOGY AND SOLID COMMITMENT

WHEN WORKING ON RAILWAYS **THERE IS NO MARGIN FOR ERROR**

OUR RAILWAY PRODUCTS ARE DEVELOPED BY OUR **EXPERIENCED DESIGNERS** AND MANUFACTURED IN SWEDEN AND GERMANY

Powerful, thought-through and flexible equipment for rational work on railway embankments around the world

- RF-System offers the market's widest range of railway equipment, designed to make your work easier and more efficient, whether you are building new or maintaining existing tracks.
- We love finding the smartest solutions and developing products that make your work faster, safer and easier.
- Our railway products have been proven over many years and are used in nearly every corner of the world.
- RF and Kinshofer are known for providing high levels of service and quick response times to resolve any issues that might arise. We are based in Sweden, Germany & France and easy to get in touch with.
- You're always welcome to discuss equipment with our designers and product specialists.
- If you need specially designed equipment we are often able to accommodate your needs, as we are in control of the entire manufacturing process from design to production.
- Concept for efficient track construction on page 24.

Railway
Equipment for tiltrotator

+46 44 81707 | sales@rf-system.se | www.rf-system.se

Plan-Sop

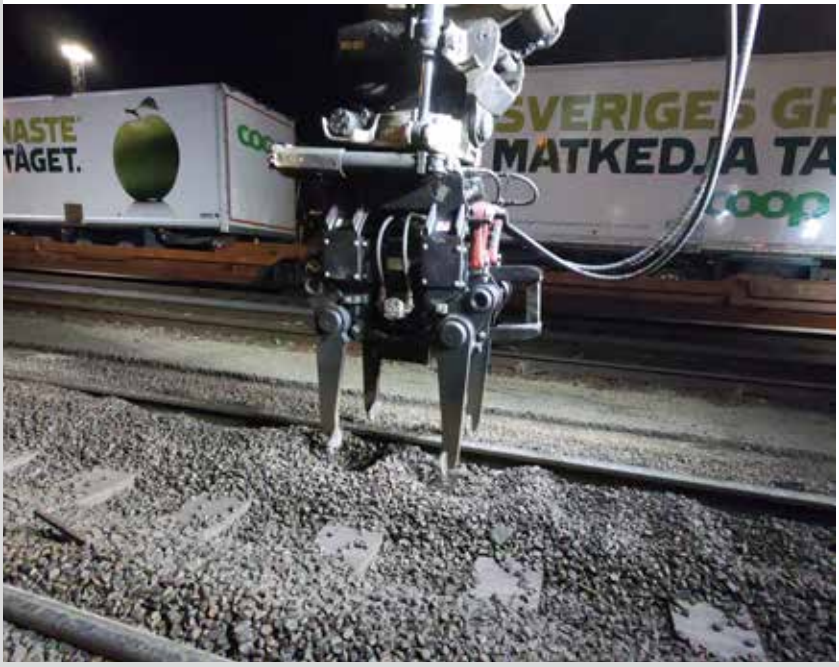
MATKEDJA TA

View in action

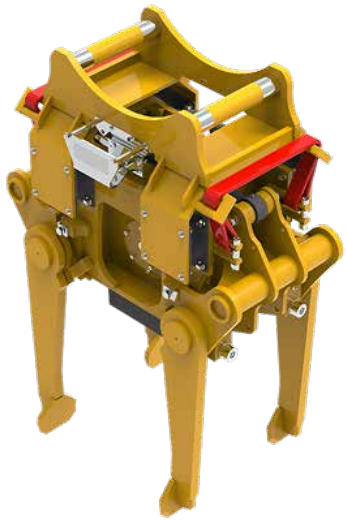

Attachments / **Railway**

Ballast Tamper RST

Efficient ballast tamper with high frequency

The Ballast Tamper RST is a well-proven machine with a low profile that fits all excavators and cranes. Weighing only 680 kg and with a replaceable attachment, it can be used on several different machines, ranging from 12-24 tons.

The tamper packs ballast efficiently with high frequency (60 Hz) and minimal noise levels. The tamper legs have durable and proven bearings, developed in collaboration with leading ball bearing suppliers, to ensure long service life. As standard, the tamper comes with an adjustment plate of 110 mm for a 400 mm packing depth.

Do you have any questions? Contact us!

High Compaction Force
7 500 kg

High Frequency
60 Hz with minimal noise levels

Low Weight
680 kg

More information

The latest generation features reinforced legs and a newly developed hydraulic system with a pressure-compensated valve for the hydraulic motor, as well as pressure relief for safe operation of the tamper legs. The motor, which can withstand higher back pressure, is included as standard, with an optional motor with drain available.

For easy relocation, the tamper can be fitted with a bolted handling bracket, compatible with the tiltrotator's grip.

Features
- Replaceable attachment for flexibility between machines
- Reinforced tamper legs and new hydraulics with pressure-compensated valve
- Motor withstands higher back pressure, optional drainage motor
- Adjustment plate 110 mm for 400 mm packing depth
- Optimal compaction occurs 70-100 mm below the ties
- Production: Approx. 150-200 packings/h (full tie change), approx. 250-300 packings/h (light compaction)

Detailed Description
- Weight: 680 kg
- Motor: 14,6 cc

Machine Requirements
- Recommended machine weight: 12-24 tons
- Option 1: One double-acting and one single-acting hydraulic circuit with free return to tank
- Option 2: Two double-acting hydraulic circuits with leak oil
- Pressure: Max 350 bar (5076 psi)
- Recommended oil flow: 50 l/min (13.2 GPM)
- Oil flow: Min 50 l/min (13.2 GPM), max 170 l/min (44.9 GPM)

Accessories
Bolted handling bracket (can be retrofitted), Adjustment plate 55 mm for a 455 mm packing depth, Ground vibrator plate, Adapter boom for parallel mounting, Transport support, Fully automatic quick coupler systems from all manufacturers

Product	Operating weight	Item number	Bracket	Weight (kg)	Compaction force (kg)	Packing depth (mm)
RST 03	12 - 24	160-75107-535-18	S45	680	7500	400
RST 03	12 - 24	160-75109-535-18	S50	680	7500	400
RST 03	12 - 24	160-75111-535-18	S60	680	7500	400
RST 03	12 - 24	160-75126-535-18	Hole pattern	680	7500	400
RST-T		160-13000-000-00	Handling bracket, bolted to one pair of legs			
Adjustment plate 55 mm		9-160-002	For packing depth 455 mm			455

+46 44 81707 | sales@rf-system.se | www.rf-system.se

Product description and accessories

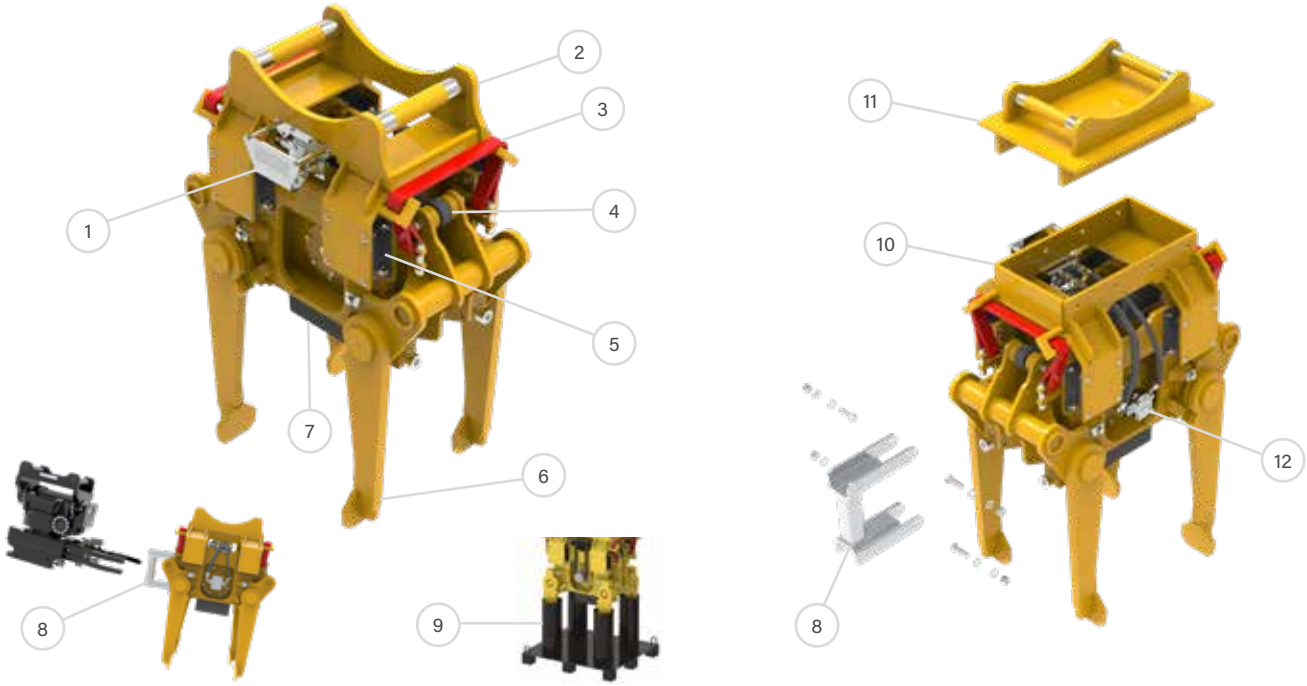

1. Protection plate hydraulic connections
2. Upper part with integrated machine coupler
3. Bar strap
4. Hydraulic cylinder for legs
5. Spring rubber
6. Legs for compacting
7. Adjustment plate for other packing depth
8. Handling bracket
9. Transport suppport
10. Upper part hole pattern RA
11. Adapter RA
12. Motor for vibro function

Technical specification

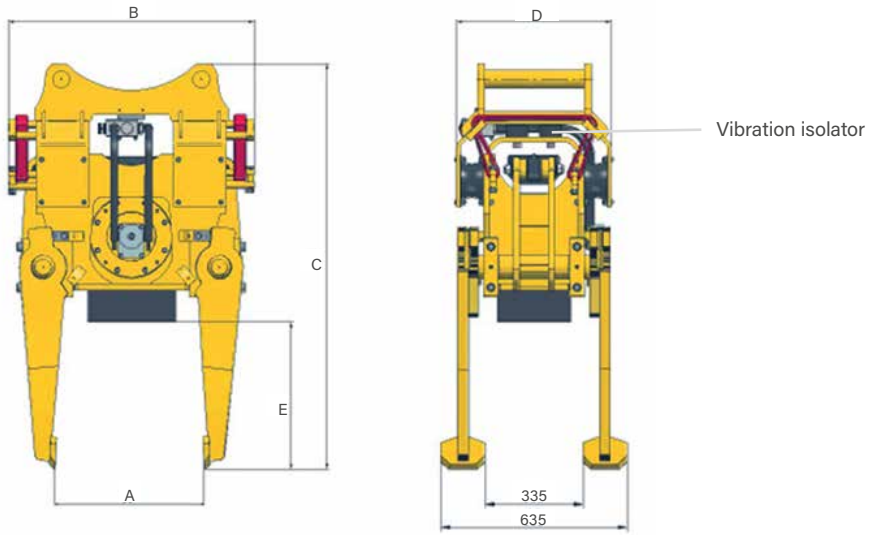

Grip area A (mm)	Length B (mm)	Height C (mm)	Width D (mm)	Depth E (mm)
195-650	830	1 310	525	505-560

View in action

Attachments / **Railway**

Adapter Beam ADP 0303

Adapter beam for dual mounting of ballast tampers

The Adapter Beam ADP 0303 enables the connection of two ballast tampers, making the work just as easy but twice as fast. The beam can be equipped with hydraulic or mechanical quick hitches (S-standard), facilitating disconnection when switching between single and dual tampers.
Ballast tampers can also be bolted directly onto the beam.
The lower hitches are adjustable, allowing the double tamper to be adapted to different track gauges.

Do you have any questions? Contact us!

Faster Work
with two ballast tampers

Easy Decoupling
when switching between single and dual tampers

Adjustable
for different track gauges

More information

Features
- Hydraulic or mechanical quick hitches (S-standard)
- Adjustable lower hitches

Detailed Description
- Weight: 535 kg (excluding attachment and 2 x Ballast Tampers RST)
- Complete weight: 2000 kg
- Width: 2230 mm
- Depth: 650 mm

Machine Requirements
- Recommended machine weight: 14-24 tons
- Option 1: One double-acting and one single-acting hydraulic circuit with free return to tank
- Option 2: Two double-acting hydraulic circuits with leak oil
- Pressure: Max 350 bar (5076 psi)
- Recommended oil flow: 100 l/min (26.4 GPM)
- Oil flow: Min 100 l/min (26.4 GPM), max 170 l/min (44.9 GPM)

Accessories
Bolt-on adapter AGS, Fully automatic quick coupler systems from all manufacturers

Product	Machine weight (t)	Article number Hydraulic lower bracket	Article number Mechanic lower bracket	Bracket	Lower bracket	Track gauge width min-max (mm)	Weight (kg)
ADP 0303	14 - 24	045-33000-948-22	045-33000-947-22	Hole pattern	S45	891 - 1668	535
ADP 0303	14 - 24	045-33000-949-22	045-33000-953-22	Hole pattern	S50	891 - 1668	535
ADP 0303	14 - 24	045-33000-950-22	045-33000-952-22	Hole pattern	S60	891 - 1668	535

+46 44 81707 | sales@rf-system.se | www.rf-system.se

Product description and accessories

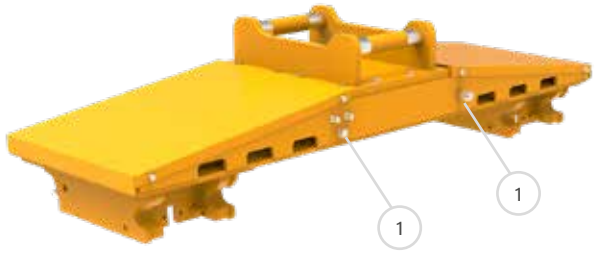

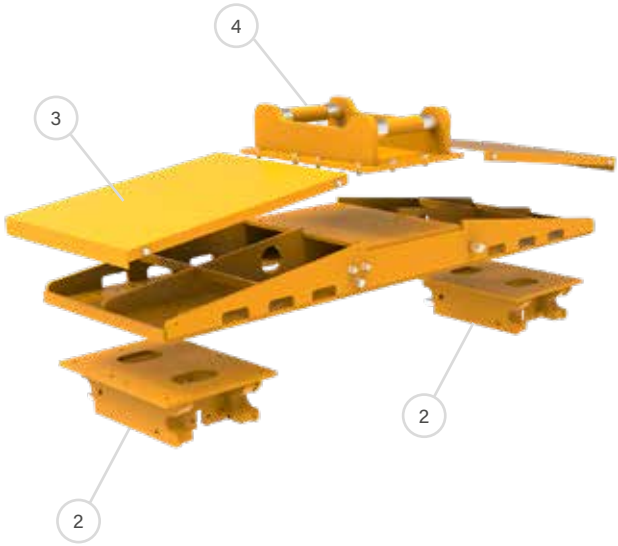

1. Hydraulic connections between ADP0303 and RST

2. Lower bracket

3. Protection plate

4. Bolt-on adapter

Technical specification

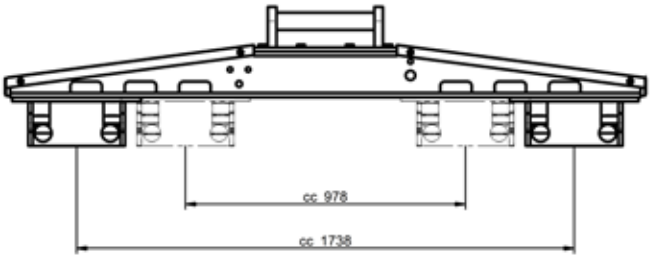

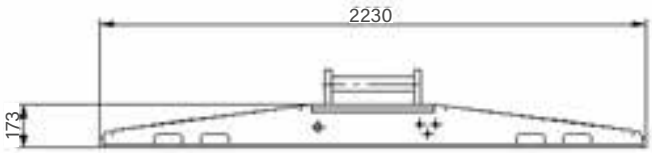

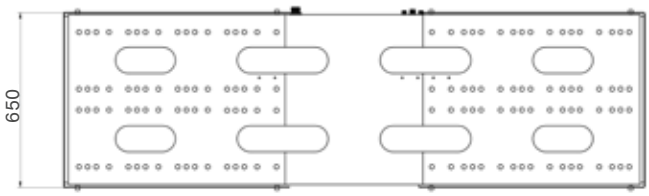

View in action

Attachments / **Railway**

Sleeper Changer RBS CLF with fastclip module

Makes sleeper replacement faster, easier and safer

The Sleeper Changer with fastclip module is a further development of our classic and well-proven Sleeper Changer RBS. The blade is used to remove ballast and the gripping claw is used to pull out old sleepers and install new ones. The well-proven angles and strength of the blade remain the same, now combined with automatic fastclip fastening. Efficiency is now even higher than before, and the workplace becomes safer as the need for personnel around the track is reduced.

Do you have any questions? Contact us!

Cost-efficient
More cost-efficient operations

High safety
Safer workplace

More information

The fastclip modules are self-adjusting to the correct position in two directions and quick to position for fastening, based on the same proven technology as our Sleeper Layer. The movements are smooth thanks to end cushioning and carefully designed motion patterns.
The modules fasten quickly with high accuracy and quality. Nothing obstructs the view during the different operations – removing ballast with the blade, positioning the sleeper or fastening with fastclip. The driver has full control throughout all operations.

Features
- Robust gripping claw with two hydraulically operated jaws
- Load holding valve ensures safe handling of the gripping claw
- Adjustable stops for exact positioning

Accessories
Setup kit (for different sleepers/rails), Control system, Fully automatic quick coupler systems from all manufacturers

Detailed Description
- Width: 2700 mm
- Max load: 2000 kg
- Grab opening: 0–440 mm
- 1435 mm track gauge as standard (adjustable blade depth provides flexibility)
- Easy adjustment between 50 kg and 60 kg rails
- The Sleeper Changer blade is built in HB400 wear steel with edge in HB500
- Handles Fastclip FC/FE
- Tool bracket for tiltrotator and quick hitch

Requirements of Excavator
- One double acting hydraulic circuit. One electrical steering signal. Constant current +/–. Pedal or button for control signal.
- Max pressure: 200 bar (2900 psi)
- Oil flow: 30–60 l/min (7.9-15.8 GPM)

Product	Item number	Bracket	Description	Weight (kg)
RBS CLF	155-33107-000-00	S45	Including module for fastclip FE/FC, Excluding setup-kit and control system	1010
RBS CLF	155-33109-000-00	S50	Including module for fastclip FE/FC, Excluding setup-kit and control system	1010
RBS CLF	155-33111-000-00	S60	Including module for fastclip FE/FC, Excluding setup-kit and control system	1010
RBS CLF	SETUP KIT		Setup kit for adaptation to sleepers and rails	
RBS CLF	CONTROL SYSTEM		Control system adapted to machine	

+46 44 81707 | sales@rf-system.se | www.rf-system.se

Product description and accessories

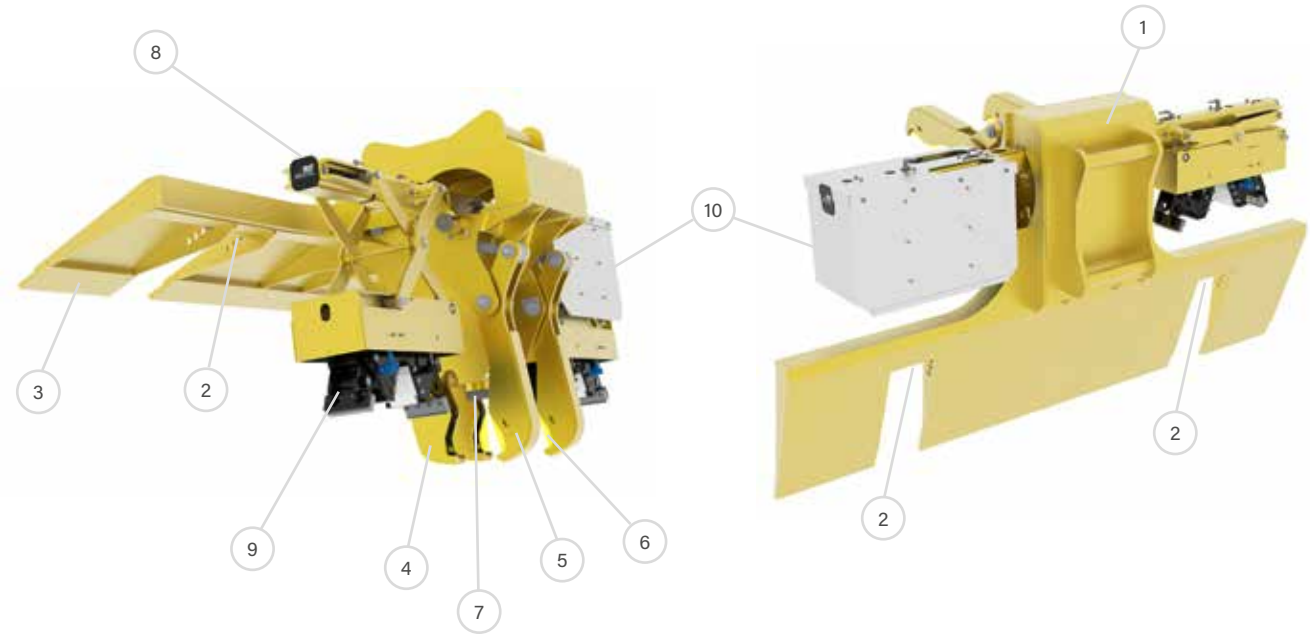

1. Fixed part with bracket
2. Adjustable rail roller with bushing
3. Wear steel
4. Fixed gripping arm
5. Moveable gripping arm
6. PUR-rubber
7. Support rubber against sleeper
8. Swivel beam
9. Fastclip module
10. Protective cover

Technical specification

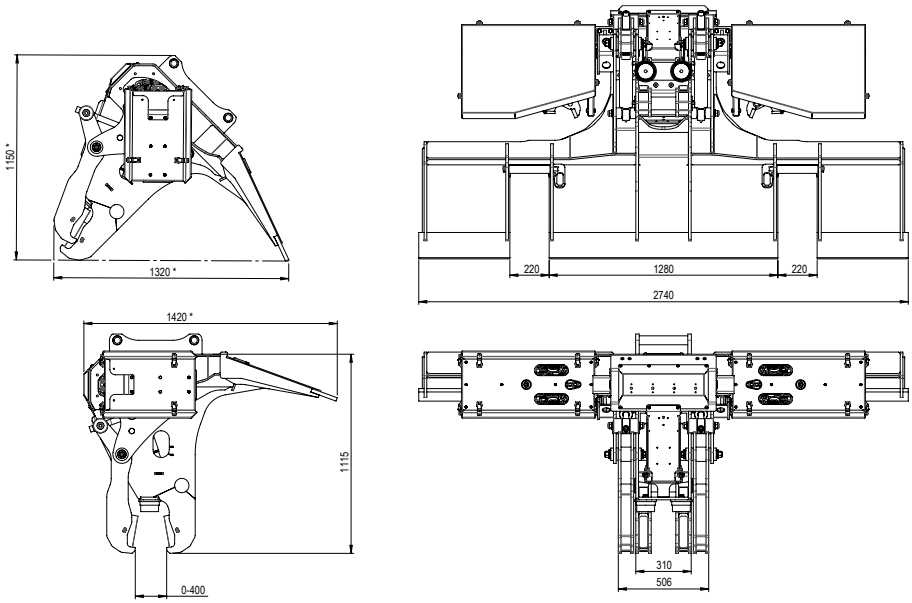

Opening width (mm)	**Length** (mm)	**Load capacity** (kg)	**Hydraulic pressure max** (bar)	**Weight** (kg)	**Operating weight** (ton)
0-400	2740	2000	200	1010	10-24

View in action

Attachments / **Railway**

Sleeper Changer RBS

Well-proven and flexible sleeper changer

The Sleeper Changer RBS features well-proven angles and strength in the blade. The blade is used to remove ballast, after which the sleeper is gripped by two robust, hydraulically operated grips and pulled from the ballast bed. A new sleeper can then be positioned and finally the blade is used to refill ballast.

The adjustable depth makes it highly flexible, and the load-holding valve guarantees safe lifts even in the event of a hydraulic pressure drop.

Do you have any questions? Contact us!

Smooth operation
Low weight

High flexibility
Adjustable blade depth

More information

Features
- Robust gripping claw with two hydraulically operated jaws
- Load-holding valve ensures safe handling of the gripping function

Detailed description
- Weight: 630 kg
- Width: 2700 mm
- Max load: 2000 kg
- Grab opening: 0–440 mm
- 1435 mm track gauge (can be adapted to other track gauges)
- Made of high tensile steell

Operating Machine
- Recommended machine weight: 10–24 tons
- One hydraulic circuit
- Max pressure: 200 bar (2900 psi)
- Oil flow: 30–60 l/min (7.9-15.8 GPM)

Accessories
Fully automatic quick coupler systems from all manufacturers

Product	Operating weight	Item number	Bracket	Type	Weight (kg)
RBS	10 - 24	155-00107-000-00	S45	For Tiltrotator	630
RBS	10 - 24	155-00109-000-00	S50	For Tiltrotator	630
RBS	10 - 24	155-00111-000-00	S60	For Tiltrotator	630

+46 44 81707 | sales@rf-system.se | www.rf-system.se

Product description and accessories

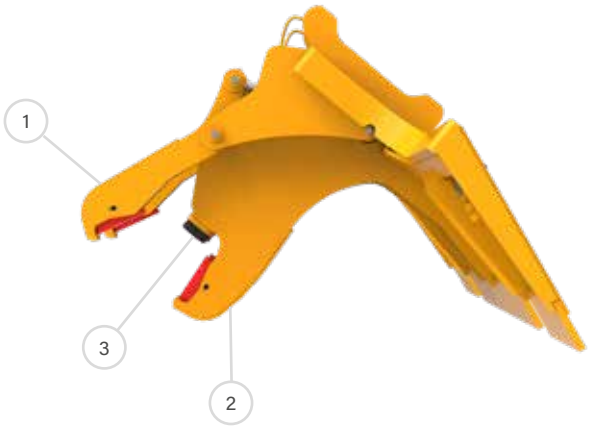

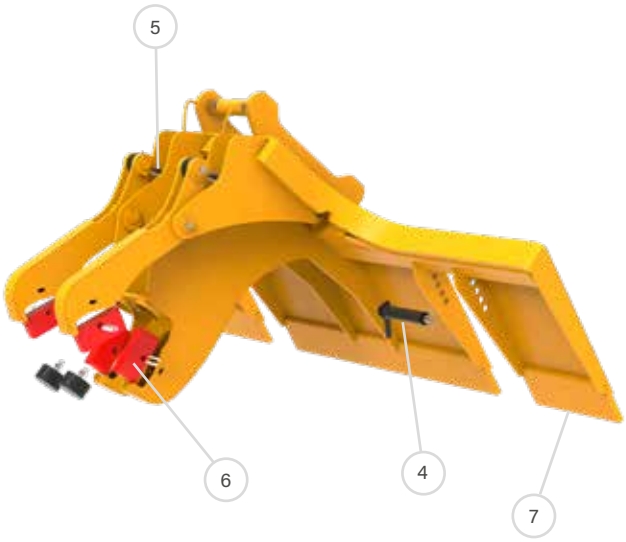

1. Moveable gripping arm
2. Fixed gripping arm
3. Support rubber against sleeper
4. Adjustable rail roller with bushing
5. Hydraulic cylinder
6. PUR rubber
7. Wear steel

Technical specification

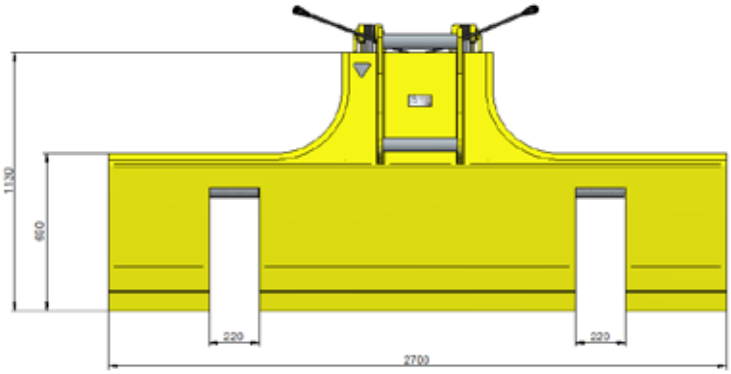

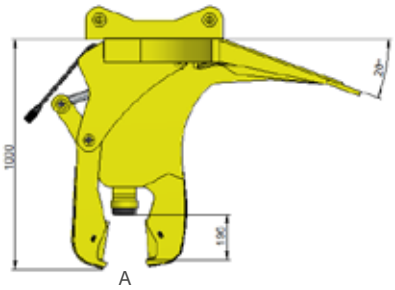

Opening width A (mm)	**Length** (mm)	**Load capacity** (kg)	**Hydraulic pressure max** (bar)
0-440	2700	2000	200

View in action

Attachments / **Railway**

Sleeper Grapple RBE

Small and easy-to-handle sleeper grapple

Sleeper Grapple RBE is a compact and functional grapple for smaller sleeper works. It is equipped with a ballast blade and an angled grip that ensures the ballast blade gets optimal angle, which is extremely useful in tight areas, such as changing sleepers in switches.

Replaceable plates for concrete and wood sleepers are included as standard.

Do you have any questions? Contact us!

Smooth operation
Small and easy-to-handle

High flexibility
Flexible for tight areas

More information

Features
- Angled grip ensures optimal working angle
- Replaceable plates for concrete and wood sleepers

Detailed description
- Weight: approx. 250 kg (depending on bracket)
- Adjustable grapple opening: 25–240 mm or 135–350 mm
- Ballast blade width: 300 mm or 500 mm

Operating machine
- One double acting hydraulic circuit
- Max pressure: 200 bar (2900 psi)
- Oil flow: 30–60 l/min (7.9-15.8 GPM)

Accessories
Fully automatic quick coupler systems from all manufacturers

Product	Item number	Bracket	Opening (mm)	Blade width (mm)	Weight (kg)
RBE	158-00107-000-03	S45	350	300	110
RBE	158-00109-000-03	S50	350	300	120
RBE	158-00111-000-30	S60	350	300	130
RBE	158-00107-000-05	S45	350	500	120
RBE	158-00109-000-00	S50	350	500	130
RBE	158-00111-000-00	S60	350	500	140

+46 44 81707 | sales@rf-system.se | www.rf-system.se

Product description and accessories

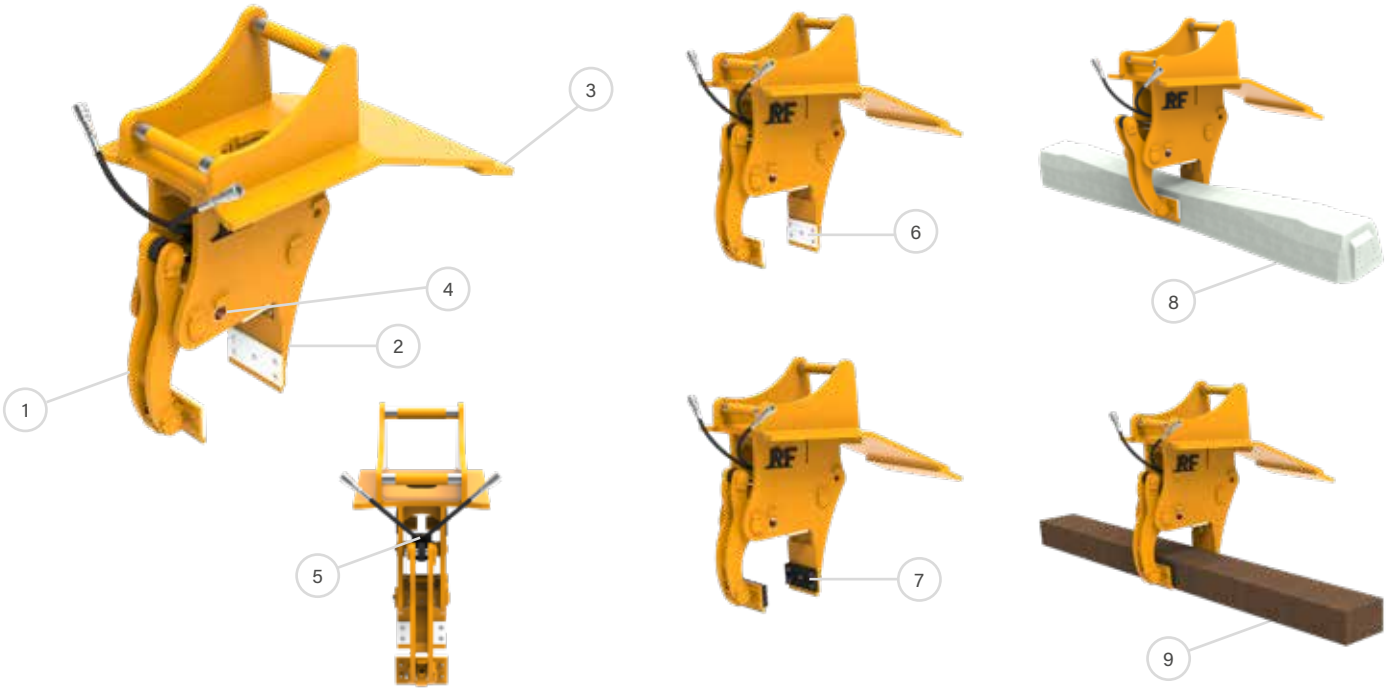

1. Moveable gripping arm
2. Fixed gripping arm
3. Ballast blade
4. Adjustable gripping width
5. Hydraulic cylinder
6. Nylon plate for concrete sleepers
7. Steel plate for wooden sleepers
8. Concrete sleeper
9. Wooden sleeper

Technical specification

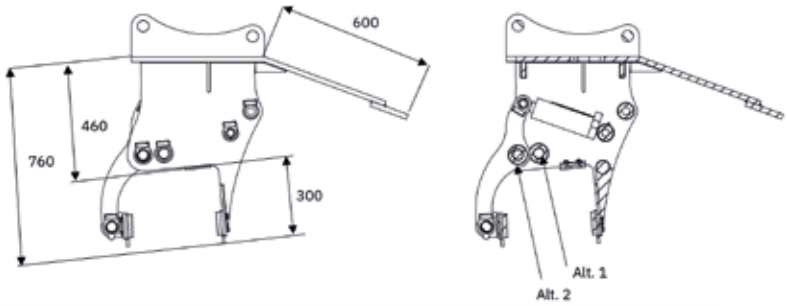

Gripping width (mm)

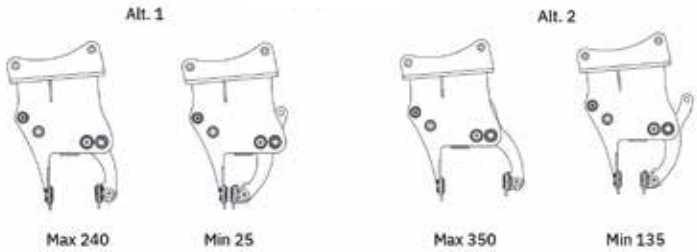

Gripping width Alt 1 min - max (mm)	**Gripping width Alt 2 min - max** (mm)
25 - 240	135 - 350

View in action

Attachments / **Railway**

Ballast Sweeper SKBB

Provides an even and stable base for railway tracks

The ballast sweeper roller levels the ballast used as a foundation for the railway track while simultaneously sweeping sleepers and rails clean. It features a robust construction and is specially developed for railway applications. The dual drive ensures smooth operation with high torque and adjustable speed. The rubber hoses protect rails and sleepers from damage. The extra strong frame withstands tough conditions, and the rubber elements are easy to replace when needed. Fork pockets facilitate easy transportation.

Do you have any questions? Contact us!

Construction
Robust construction

Gentle
Gentle on rails and sleepers

Maintenance
Easy to maintain

Application
Interchangeable roller provides multiple areas of use

More information

The brush can be profiled to match sleeper type and recess for the rail can be ordered. It is also possible to have rollers with different profiles to switch between if required. Bearings and drive chain are included when purchasing a separate roller.

With a separate sweeper roller, you can switch between sweeping ballast and sweeping snow or other materials, giving you two machines in one.

It is also possible to disconnect one motor when sweeping to increase the speed of the roller. With chain drive you get a compact design and protected motor, with the possibility to change drive for another gear ratio.

Features
- Can operate at low speed with high torque thanks to dual motors
- Sweeps both ballast and compacted snow (requires change to sweeper roller)

Detailed Description
- Width from 1000 to 3000 mm

Excavator Requirements
- One hydraulic circuit
- Max pressure: 140 bar (2030 psi)
- Oil flow (two motors): 70–100 l/min (18.5-26.4 GPM)

Accessories
Bolt-on adapter AGS SKB, Fully automatic quick coupler systems from all manufacturers, Sweeper roller, Protection kit with rubber skirts, Profiled recesses for rails

Product	Item number	Bracket	Hose (mm)	Motor (ccm)	Oil flow (l/min)	Width (mm)	Weight (kg)	Protection kit
SKBB 10	188-60213-173-10	Hole pattern	55x330	250x2	70-100	1000	380	9-188-012
SKBB 15	188-60213-173-15	Hole pattern	55x330	250x2	70-100	1500	430	9-188-004
SKBB 20	188-60213-173-20	Hole pattern	55x330	250x2	70-100	2000	480	9-193-016
SKBB 26	188-60213-173-26	Hole pattern	55x330	250x2	70-100	2600	520	9-188-013
SKBB 30	188-60213-173-30	Hole pattern	55x330	250x2	70-100	3000	575	

+46 44 81707 | sales@rf-system.se | www.rf-system.se

Product description and accessories

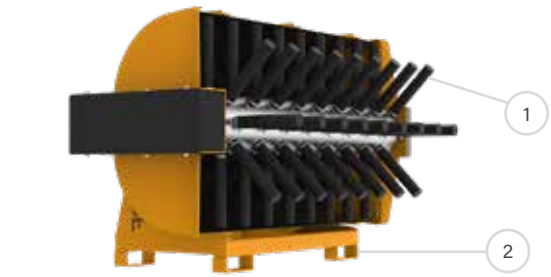

1. Ballast hose
2. Fork pockets
3. Motor
4. Chain drive
5. Bolt-on adapter AGS SKB
6. Plastic guard
7. Protection plate
8. Protection kit with rubber skirts
9. Replaceable roller with close-packed bristles

Technical specification

SKBB 26

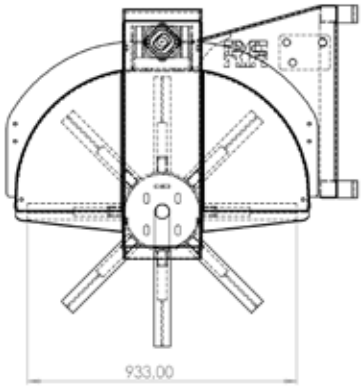

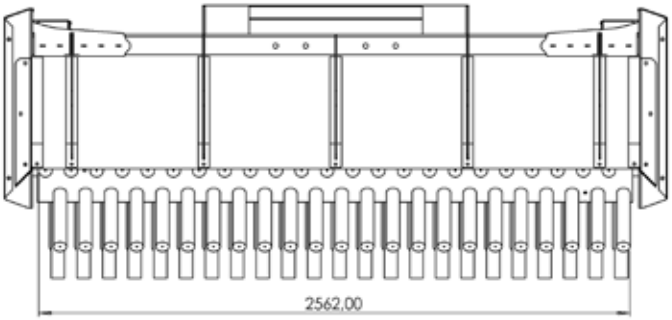

View in action

Attachments / **Railway**

Levelling Plough AVP

Efficient tool for gravel and ballast

Levelling Plough AVP is developed for gathering and spreading gravel and ballast efficiently. The share height is adjustable and the share is made of high strength ballast rubber. The robust design and replaceable share protect rail and fastenings during operation.

Several brackets are available. The levelling plough is cone-shaped to access with the narrow end between rails, for example at railway switches.

Do you have any questions? Contact us!

Efficient
Easy to use

Design
Robust design

Good protection
Protects rail and fastenings with replaceable share

More information

Features
- Share made of high strength ballast rubber
- Adjustable share height
- Adapted for narrow spaces between rails

Detailed description
- Weight: 215 kg
- Width: 800 mm
- Length: 1200 mm
- Height: 700 mm

Machine requirements
- Recommended machine weight: 8-20 ton

Product	Item number	Bracket	Weight (kg)	Width (mm)
AVP	178-00107-000-01	S45	215	800
AVP	178-00109-000-01	S50	215	800
AVP	178-00111-000-01	S60	215	800

+46 44 81707 | sales@rf-system.se | www.rf-system.se

Product description and accessories

1. Bracket

2. Share made of ballast rubber

3. Adjustable share height

Technical specification

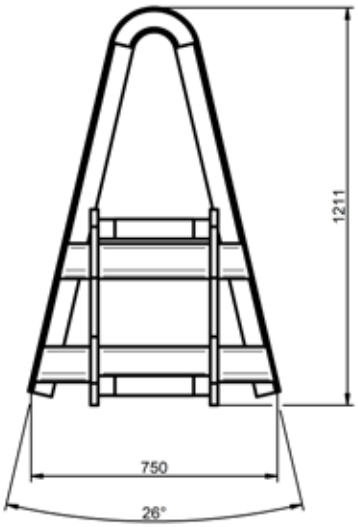

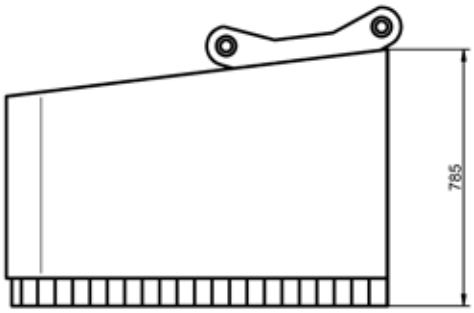

View in action

Attachments / **Railway**

Ballast broom MSKB

for gripper cassette

Smart and easy-to-handle broom for railway

Ballast broom MSKB is a small and versatile broom that can be used in combination with other tools. The ring coupling is designed to give a firm and steady grip with the tiltrotators gripper. The standard version is equipped with rubber blades, and the broom can also be delivered with hole pattern for the bracket. The broom with rubber hoses is 1400 mm wide.

Also available with plastic bristles (MSK) in widths of 1000 mm and 1600 mm.

Do you have any questions? Contact us!

Smooth operation
Small and easy-to-handle

Combinations
Can be used in combination with other tools

High flexibility
Flexible with rubber hoses or plastic bristles

More information

Features
- Rubber blades mounted as standard
- Can be delivered with hole pattern for the bracket
- Used in combination with other tools, for example bucket

Detailed description
- Weight: 175 kg
- Width: 1400 mm with rubber hoses (1000 mm and 1600 mm with plastic bristles)
- Three rows of rubber hoses (43 pcs)

Operating machine
- Tiltrotator with gripper (MSKB / MSK standard model)

Accessories
Hole pattern for Bolt-on Bracket AGS SKB

Product	Item number	Bracket	Width (mm)	Bristle	Weight (kg)
MSKB 14 ballast	210-14020-173-01	Ring coupling for gripper cassette	1400	Rubber hoses	175
MSK 10	210-10020-184-01	Ring coupling for gripper cassette	1000	Plastic bristles	140
MSK 16	210-16020-184-01	Ring coupling for gripper cassette	1600	Plastic bristles	170

+46 44 81707 | sales@rf-system.se | www.rf-system.se

Product description and accessories

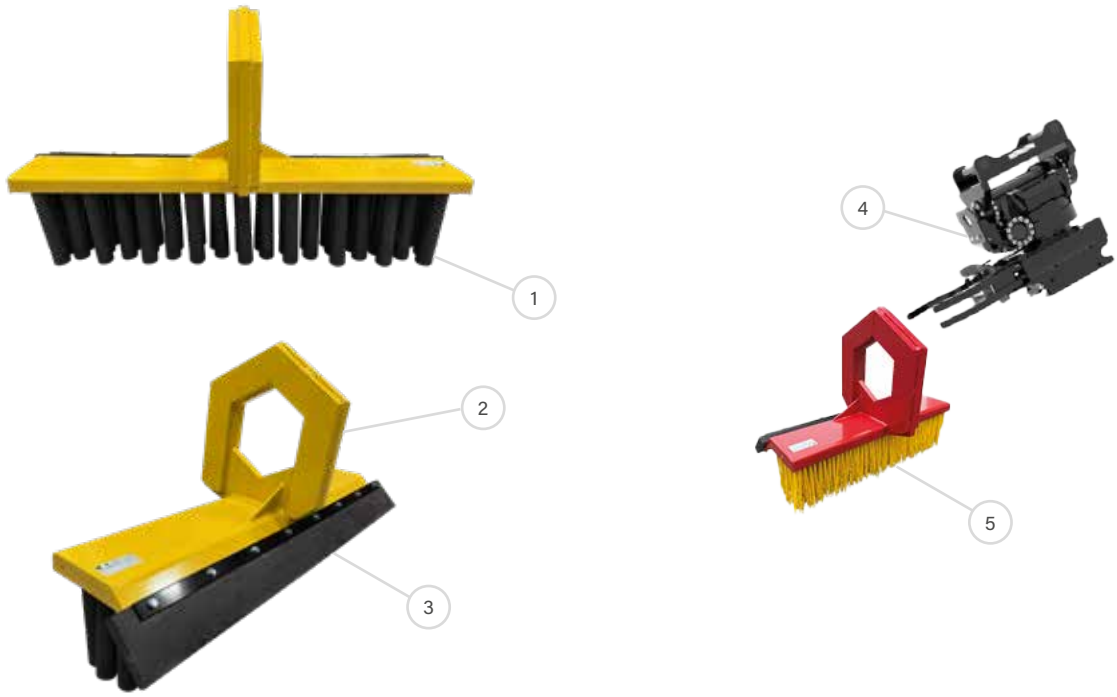

1. Rubber hoses
2. Ring coupling
3. Angled rubber blade
4. Tiltrotator with gripper
5. Plastic bristles

Technical specification

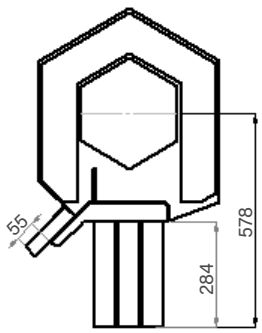

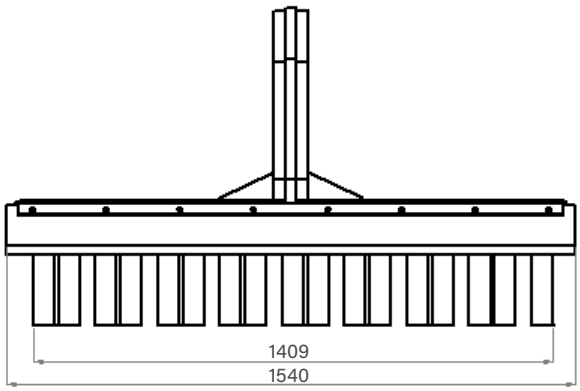

View in action

Attachments / **Railway**

Track Construction

The concept for track construction increases efficiency by 25%

The method creates a safer workplace and reduces the need for personnel around the track. It is particularly suitable in tight areas where access routes cannot be built or where no space is available for working machines beside the track.

The concept for track construction consists of: Rail Lift on wheels RLF, Sleeper Layer with fastclip module RUS33 CLF, that can handle Fastclip FE and FC fastenings togheter with 50-60 kg rail and Sleepers Trolley SLF for transportation of sleepers.

Do you have any questions? Contact us!

Efficient
25% more efficient

Fewer personnel
Reduces the need for personnel around the track

Smooth operation
Suitable for tight areas and sensitive ballast beds

Product	Recommended operating weight (t)	Description	Type of arms	Number of sleepers lifted	Weight (kg)
RUS33	15 - 24	Sleeper Layer prepared for fastclip module	Center gripped	3	1080
CLF		Fastclip module			880
Laser		Laser Rangefinder			
RLF		Rail Lift on wheels			515
SLF		Sleepers Trolley 2500 x 2470 mm			1330

+46 44 81707 | sales@rf-system.se | www.rf-system.se

Product description and accessories

1

2

3

1. Sleeper Layer with fast clip module

2. Rail Lift on wheels

3. Sleepers Trolley

View in action

Attachments / **Railway**

Sleeper Layer with fastclip module RUS33 CLF

Quick laying and fastening of sleepers

Sleeper Layer RUS33 CLF handles sleepers from a stack or trolley and fastens them under the rails in the same operation as the laying, thanks to the fastclip module (CLF) for Fastclip FC and FE. The model is also available without the fastclip module for sleeper laying with manual fastening, both on the ballast bed and up against the rail.
1435 mm track gauge as standard.

Do you have any questions? Contact us!

Efficient
Laying and fastening in the same operation

Fewer personnel
Reduces the need for personnel around the track

Smooth operation
Suitable for tight areas and sensitive ballast beds

Stable delivery
Delivered with transport stand

More information

The concept for track construction increases efficiency by 25%.
The method creates a safer workplace and reduces the need for personnel around the track. It is particularly suitable in tight areas where access routes cannot be built or where no space is available for working machines beside the track.

The concept for track construction consists of: Rail Lift on wheels RLF, Sleeper Layer with fastclip module RUS33 CLF that handles Fastclip FE and FC together with 50–60 kg rail, and SleepersTrolley SLF for transportation of sleepers.

Features
- Handles Fastclip FC and FE
- 50–60 kg rail
- Possibility to change Setup for adaptation to different rail and sleeper types

Detailed description
- Weight: 1960 kg (including transport stand 2060 kg)
- Max load: 3 × 360 kg
- Total weight incl. load during operation: 3040 kg
- Indicator light for electric valve

Machine requirements
- Recommended operating weight: 15–24 ton
- 2 double-acting hydraulic functions
- 1–2 electrical functions (1 electrical function standard, 1 electrical function for constant voltage to laser meter optional)
- Pressure: max 200 bar (2900 psi), min 175 bar (2538 psi)
- Oil flow: 30–60 l/min (7.9-15.8 GPM)

Accessories
Range finder (laser) with lamp set for correct sleeper laying. Fully automatic quick coupler systems from all manufacturers

Product	Operating weith	Item number	Description	Bracket	Weight (kg)	Type of arms	Number of sleepers lifted
RUS33	15 - 24	156-33000-000-00	Sleeper Layer prepared for fastclip module	Bolt-on Bracket AGS	1080	Center gripping	3
RUS33-T		670-00228-920-00	Fastclip module CLF for RUS33		880		
RUS33-T		9-900-002	Laser Rangefinder				

+46 44 81707 | sales@rf-system.se | www.rf-system.se

Product description and accessories

1. Bolt-on adapter
2. Glide axle
3. Adjustable bar
4. Glide section/ Gripping arms
5. Center gripped arms
6. Support rollers
7. Fastclip module
8. Customized pressure plates
9. Laser rangefinder with indicator lamps
10. Bracket for transporting RLF
11. Transport support

Technical specification

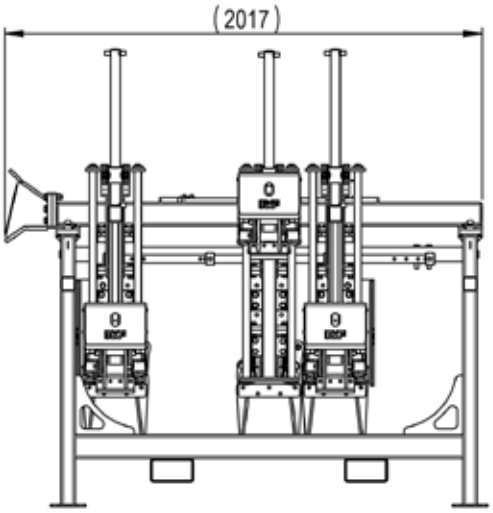

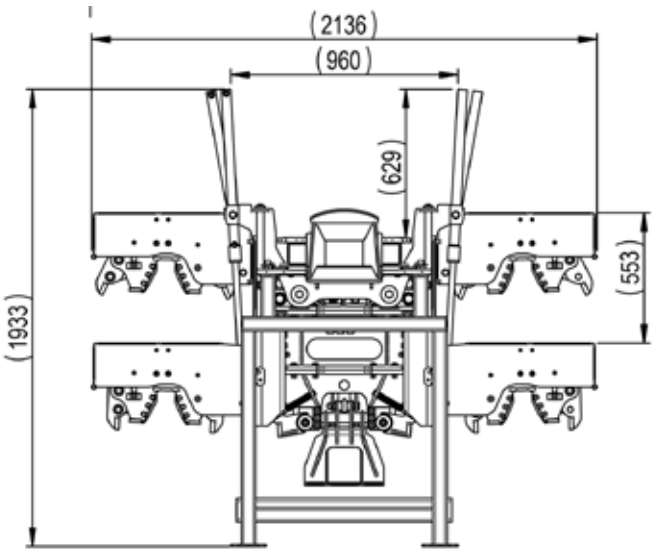

Length (mm)	**Height** (mm)	**Width** (mm)
2017	1933	2136

View in action

Attachments / **Railway**

Rail Lift on wheels RLF

Safe and stable rail lifting

Rail Lift on wheels RLF is developed and especially adapted for use together with our Sleeper Layer with fastclip module, to lift the rail so that sleepers can be laid underneath.
A specially constructed connector device between the Sleeper Layer and Rail Lift ensures that you easily move and steer the Rail Lift on the track in front of the machine.

Bearing-mounted rollers ensure precise rail guidance in both the vertical and lateral directions.

Do you have any questions? Contact us!

Safe and stable
Safe lifting and stable rail handling

Smooth handling
Easy maneuvering in front of the machine

Precise control
Precise guidance with bearing-mounted rollers

More information

The Rail Lift is now available in two different versions. The original model (Variant A), with wide wheels running on the outside of the rail, provides excellent stability, even when loading the first rail. The newly developed model (Variant B), with four wheels running inside the rail, has a narrower design, allowing it to pass obstacles such as platforms. It is also equipped with adjustable support legs to provide additional stability when loading the first rail.

Features
- Special connector device for Sleeper Layer RUS33 CLF
- Bearing-mounted guide rollers for vertical and lateral guidance
- Adapted for 1435 mm track gauge as standard
- Pneumatic tyres for easy movement on the ballast bed
- No self-drive, the unit is propelled forward when coupled to the RUS33

Detailed description
Variant A:
- Weight: 515 kg
- Width: 2840 mm
- Length: 3450 mm
- Tyres: 400/60×15.5 MRL

Variant B:
- Weight: 834 kg
- Width: 2230 mm
- Length: 4030 mm
- Tyres: 215/75R17,5

Machine requirements
- For use in combination with Sleeper Layer RUS33

Product	Item number	Variant	Coupling	Width (mm)	Length (mm)	Wheels	Weight (kg)
RLF	309-00020-090-01	A	Adapted for Sleeper Layer RUS33	2840	3450	Tyre 400/60x15.5 MRL	515
RLF	309-00020-090-99	B	Adapted for Sleeper Layer RUS33	2230	4030	Tyre 215/75R17,5	834

+46 44 81707 | sales@rf-system.se | www.rf-system.se

Product description and accessories

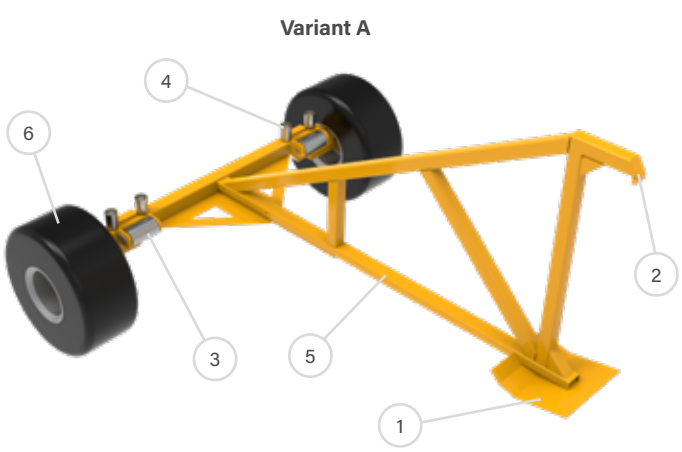

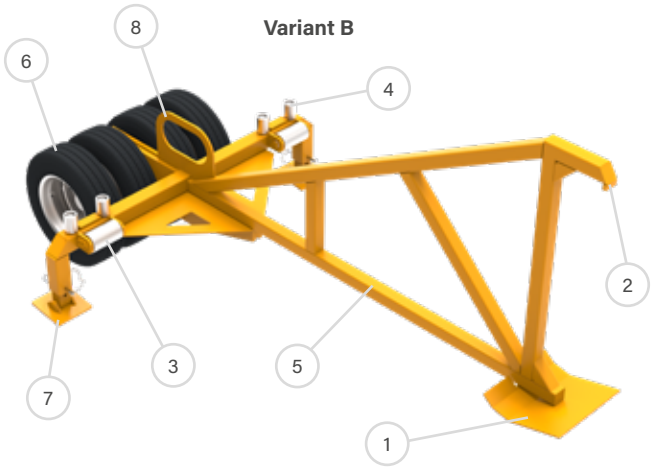

1. Support plate
2. Hook for the RUS33 holder
3. Rail guide roller
4. Lateral guide roller
5. Drawbar
6. Wheel
7. Rear support plate
8. Lifting lug

Technical specification

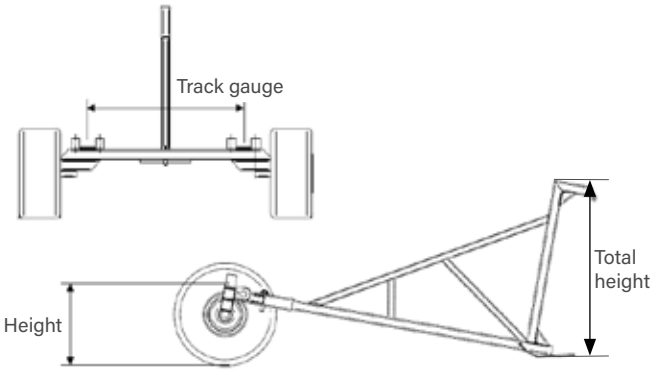

Variant A

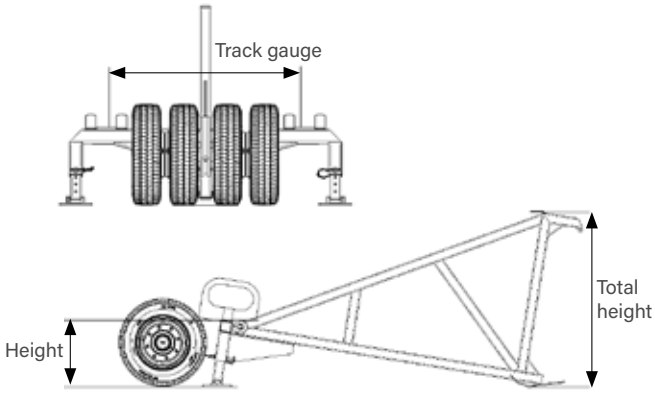

Variant B

Variant	Track gauge (mm)	Wheel	Weight (kg)	Width (mm)	Height (contact surface) (mm)	Length (mm)	Total height (mm)
A	1435	Tyre 400/60x15,5 MRL	515	2840	700	3450	1500
B	1435	Tyre 215/75R17,5	834	2230	560	4030	1500

Sleepers Trolley SLF

Efficient transportation of sleepers

Sleepers Trolley SLF is developed for efficient transportation of sleepers between storage, Rail Lift and Sleeper Layer RUS33 CLF. The trolley facilitates the workflow in track construction and contributes to efficient handling of sleepers on the track.

It is adapted to work together with the other machines in the concept for rational track construction (RUS33 CLF, RLF and SLF), making it possible to reduce the need for personnel around the track and avoid driving on the finished ballast bed.

Do you have any questions? Contact us!

Safe transport
Quick and safe transportation of sleepers

Track construction
Integrated with the concept for rational track construction

Fewer personnel
Reduces the need for personnel on the track

More information

Features
- Adapted for use with Sleeper Layer RUS33 CLF and Rail Lift RLF
- Efficient handling of sleepers between storage and laying point
- Emergency and parking brake
- No self-drive, intended to be pulled after a railbound vehicle
- Equipped with load and lifting securing lugs

Detailed description
- Weight: 1500 kg
- Max load: 12 ton
- Width: 2470 mm
- Length incl tow: 2950 mm
- Height from rail: 495 mm

Machine requirements
- Used in combination with railbound excavator or loader
- Tow bar VBG190: Max towing vehicle weight: 40.7 ton, Max trailer weight: 30 ton
- Max pressure: 200 bar (2900 psi)

Product	Item number	Coupling	Max load (ton)	Max permitted speed (km/h)	Track wheels (mm)	Track gauge (mm)	Breaks	Width (mm)	Height (mm)	Length (mm)	Weight (kg)
SLF	351-40020-090-01	Tow bar	12	20	350	1435	Emergency and parking	2470	495	2500	1500

+46 44 81707 | sales@rf-system.se | www.rf-system.se

Product description and accessories

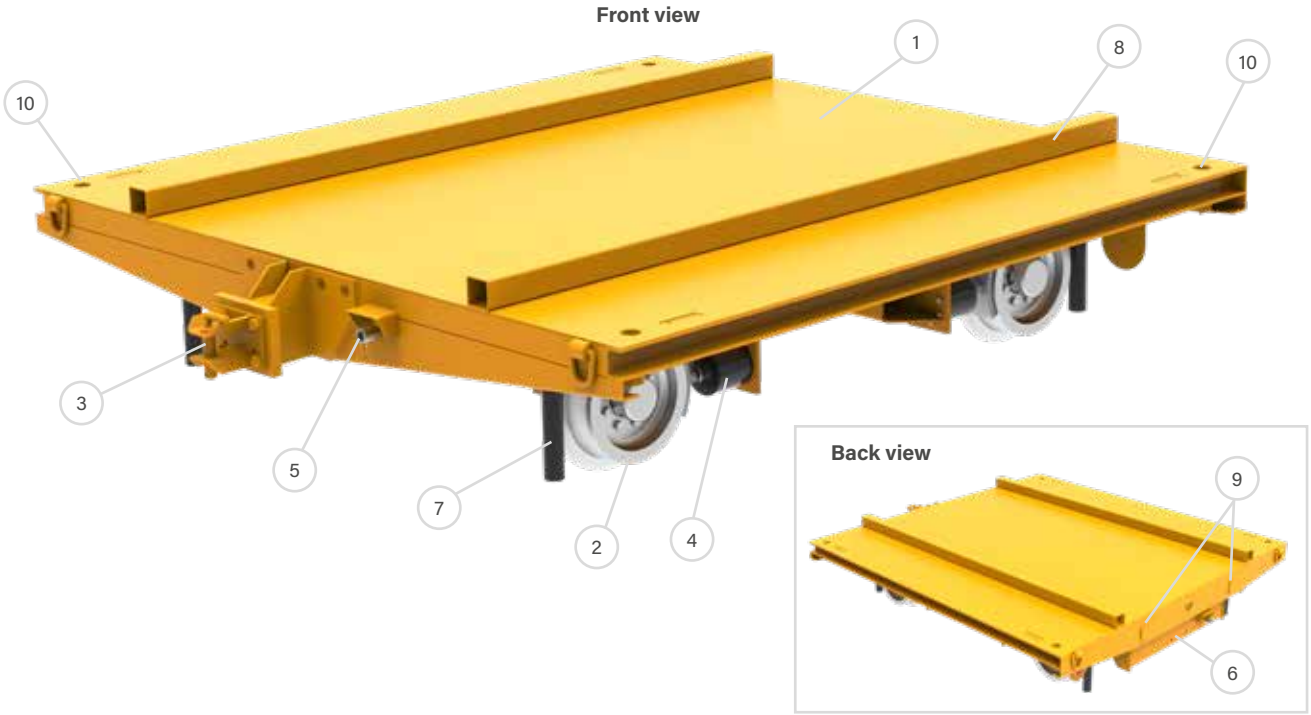

1. Bed
2. Rail wheel
3. Tow bar
4. Brake cylinder
5. Hydraulic connection
6. Tow hook
7. Ballast cleaner rubber
8. Support bar
9. Spacer storage extension
10. Stake pockets

Technical specification

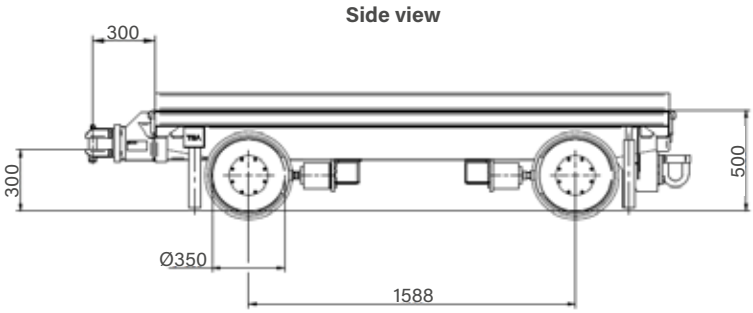

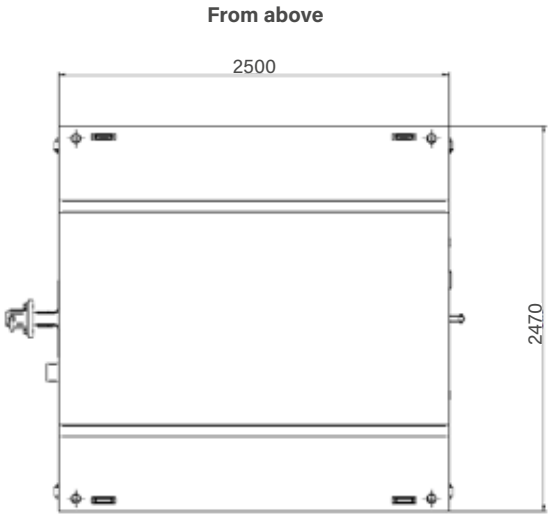

View in action

Attachments / **Railway**

Sleeper Layer RUS

Center- or end-gripped for quick sleeper laying

Sleeper Layer RUS is available in two basic versions: center-gripping or end-gripping arms.

The center-gripped RUS model is used for traditional sleeper laying or for laying under existing rails (3-armed) and can also be ordered with off-center grabbing to pick sleepers directly from pallet forks. Available with 3, 4, 5 or 6 arms.

The end-gripped RUS can pick all types of wood or concrete sleepers even if they are not placed at the correct distance. Available with 3, 4, 5 or 6 arms.

Do you have any questions? Contact us!

Efficient
Quick and safe sleeper laying

High flexibility
Flexible for different working methods and rail conditions

Center-gripped
Can be offered with off-center grabbing

More information

Features
- Center- or end-gripping arms
- Available with 3–6 arms
- Prepared for two dual operating hydraulic circuits or one hydraulic circuit + electric valve

Detailed description
- Weight: 530–1900 kg
- Incl. transport stand

Machine requirements
- Recommended machine weight: 12–24 ton (3–4 sleepers), 18–24 ton (5–6 sleepers)
- Option 1: Two double-acting hydraulic circuits
- Option 2: One double-acting hydraulic circuit + one solenoid valve
- Max pressure: 200 bar (2900 psi)
- Oil flow: 30–60 l/min (7.9-15.8 GPM)

Accessories
Bolt-on Bracket AGS, Extension to center-gripping arms for laying under rails, Rotator for crane mounting, Rangefinder (laser) with lamp set for correct sleeper laying, Fully automatic quick coupler systems from all manufacturers

Product	Operating weight (t)	Item number	Bracket	Type of arms	Weight (kg)	Number of sleepers lifted
RUS 03	12 - 24	156-00126-000-03	Bolt-on Bracket AGS	Center-gripping	530	3
RUS 04	12 - 24	156-00126-000-04	Bolt-on Bracket AGS	Center-gripping	650	4
RUS 05	18 - 24	156-00126-000-05	Bolt-on Bracket AGS	Center-gripping	800	5
RUS 06	18 - 24	156-00126-000-06	Bolt-on Bracket AGS	Center-gripping	950	6
RUS2 03	12 - 24	156-00126-565-03	Bolt-on Bracket AGS	End-gripping	1150	3
RUS2 04	12 - 24	156-00126-565-04	Bolt-on Bracket AGS	End-gripping	1400	4
RUS2 05	18 - 24	156-00126-565-05	Bolt-on Bracket AGS	End-gripping	1650	5
RUS2 06	18 - 24	156-00126-565-06	Bolt-on Bracket AGS	End-gripping	1900	6

+46 44 81707 | sales@rf-system.se | www.rf-system.se

Product description and accessories

Special model with off-center grabbing

1. Center-gripping arms

2. End-gripping arms

3. Upper part hole pattern RA

4. Adapter RA

5. Adjustable bar

6. Glide axle

7. Mid section

8. Glide section / Gripping arms

View in action

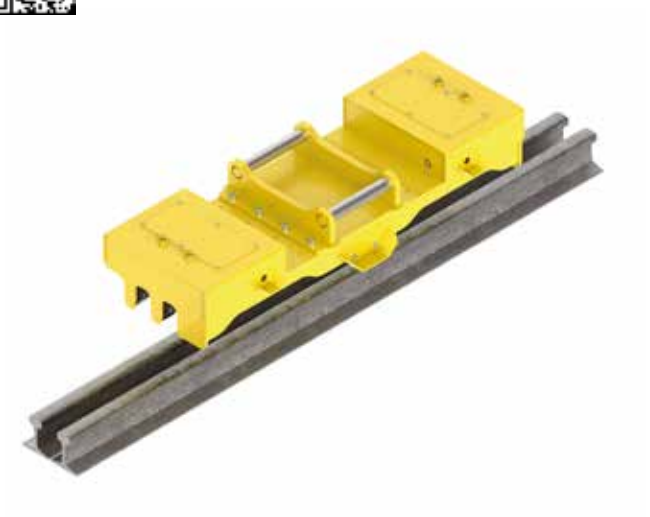

Attachments / **Railway**

Rail Manipulator RLD

Safe and gentle rail handling

Rail Manipulator RLD enables safe and quick lifting of rails up to 18 meters and a total weight of 2500 kg. The tool grips the rail by the waist, eliminating the risk of damage or marks on the rail.

RLD can handle one or two rails at the same time. Recesses allow the rails to be stacked tightly next to each other, and the underside of the rail remains free to be placed on the base before the lift is released. Clear indicators show when the rail is in position for locking and when it is locked, increasing safety during lifting.

Do you have any questions? Contact us!

Safe lifting
Safe rail handling

Gentle handling
Leaves no marks

Efficient lifting
Can lift two rails at the same time

Valve included
Delivered with pressure limitation valve

More information

Features
- Grips the rail by the waist
- Indicators for correct locking

Detailed description
- Weight: 460 kg (excluding bracket)
- Length: 1800 mm
- Max rail length: 18 meters
- Max load: 2500 kg

Machine requirements
- Recommended machine weight: 15–24 ton
- One double acting hydraulic circuit
- Max pressure: 250 bar (3626 psi)
- Oil flow: max 35 l/min (9.2 GPM)

Accessories
Bolt-on Bracket AGS, Fully automatic quick coupler systems from all manufacturers

Product	Item number	Bracket	Load capacity (kg)	Weight excl bracket (kg)
RLD12	309-00382-130-02	S45, S50, S60	2500	460

+46 44 81707 | sales@rf-system.se | www.rf-system.se

Product description and accessories

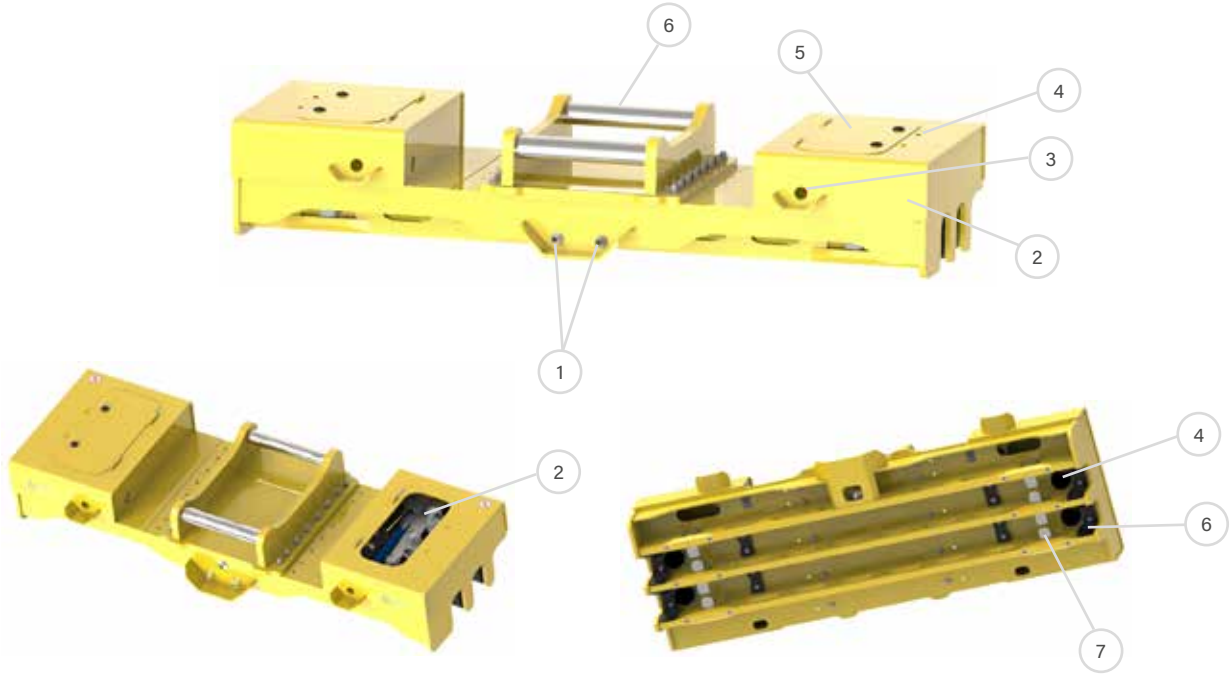

1. Hydraulic connections
2. Linkage housing
3. Lock marker
4. Rubber damper
5. Protection hatch
6. Bolt-on adapter
7. Lock lug

Technical specification

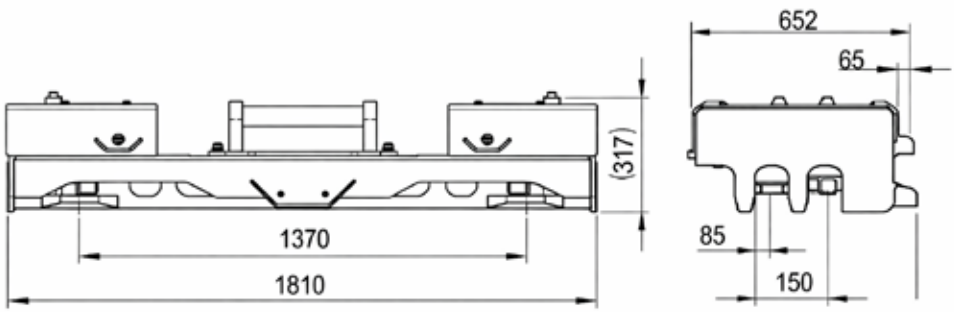

View in action

Attachments / **Railway**

Lid Opener LÖP G2

Smooth lifting and positioning of cable trench lids

Generation 2 of the Lid Opener is an efficient tool for quick cable installation in existing cable trenches with concrete lids, both on-top and lowered types.
The lid opener is adjustable for lids up to 75 mm thickness and recommended trench wall thickness 50–80 mm, with the possibility to adjust for greater thickness if required.

Do you have any questions? Contact us!

High safety
Quick and safe lifting of cable trench lids

Adjustable
Adjustable for different thicknesses and widths

Flexible
Can be used for both on-top and lowered lids

More information

The standard model is adjustable from 142–670 mm, optimal for lids 350–645 mm wide, and can be adjusted for lowered lids with minimum width 130 mm (change of extension rods is recommended for lids smaller than 350 mm).

Features
- Adjustable width: 142–670 mm
- Optimized for lids 345–645 mm wide
- Adjustable for lid thickness up to 75 mm

Detailed description
- Extension kit available for lids 655–1055 mm with inner trench dimension 510–910 mm

Machine requirements
- Recommended machine weight: 4–24 ton
- Weight: 290 kg (excluding bracket)

Accessories
Bolt-on Bracket AGS, Extension kit

Product	**Operating weight** (t)	**Item number**	**Bracket**	**For lids** (mm)	**Weight** (kg)
LÖP 03	4 - 24	170-03228-000-00	Hole pattern	345 - 645	290
LÖP 03-T	Extension kit Lid Opener				

+46 44 81707 | sales@rf-system.se | www.rf-system.se

Product description and accessories

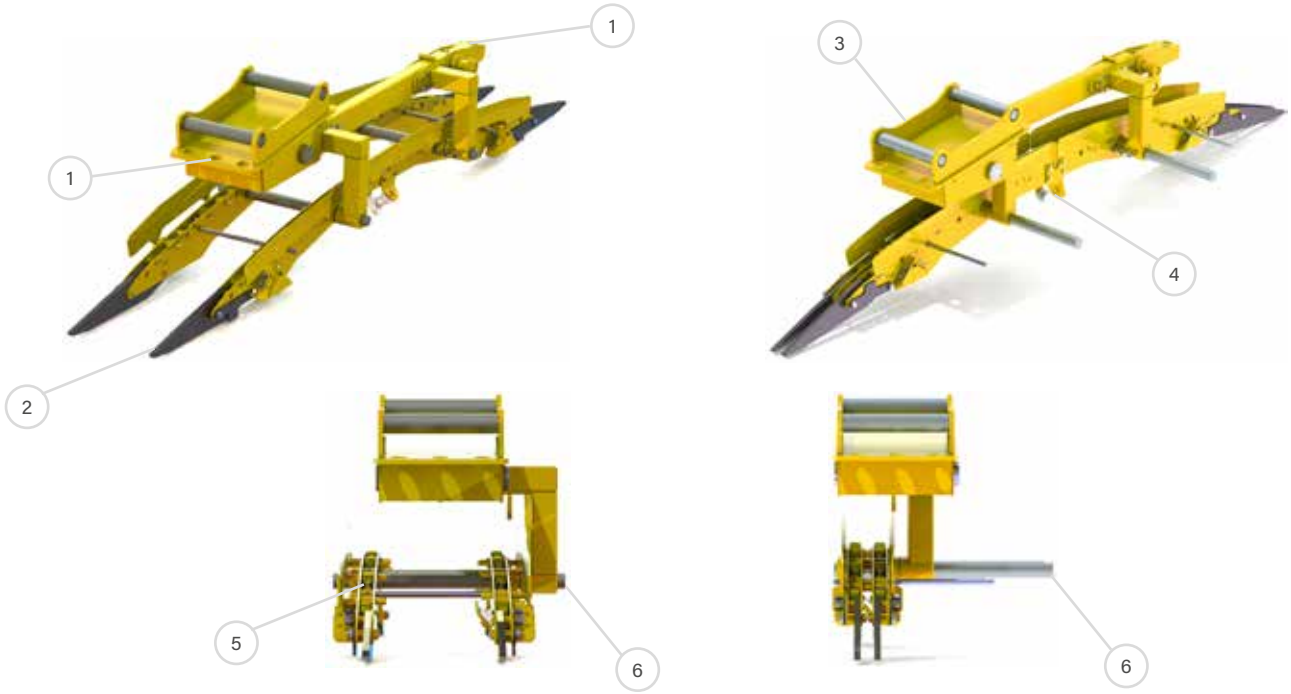

1. Towing holes
2. "Pick-up" Lid lift rail
3. Bolt-on adapter
4. Cable guide
5. Transport wheel
6. Adjusting rods (exchangeable)

Technical specification

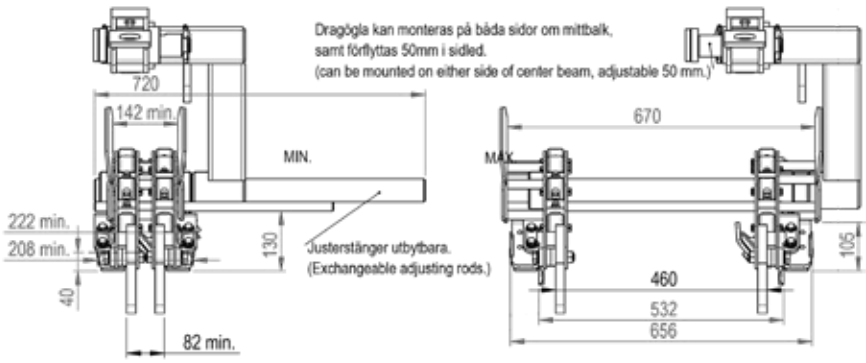

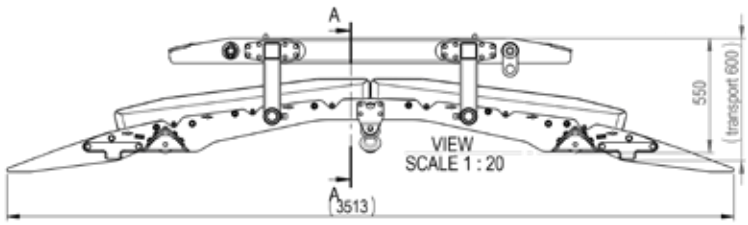

View in action

Attachments / **Railway**

Cable Trench Lid Grapple GRL-S

Good-value grapple for safe handling of cable trench lids

Cable Trench Lid Grapple GRL-S is an efficient tool for laying and transporting new or old palletstacked cable trench lids. The grapple arms are rubber coated for a secure hold without damaging the lids.
The latest model has adjustable arms that can be locked in parallel position for maximum stability and safety when handling different lid models. The grapple is delivered with load-holding valve and accumulator.

Do you have any questions? Contact us!

Safety
Secure and steady grip without damage

Adjustable
Adjustable arms for different lid models

Smooth handling
Easy and quick handling

More information

Features
- Rubber coated grapple arms
- Adjustable arms that can be locked in parallel position
- Load-holding valve and accumulator

Detailed description
- Max load: 800 kg
- Width: 350 mm
- Handles lids up to 1000 mm

Operating machine
- Recommended machine weight: 8–24 ton
- One double acting hydraulic circuit
- Max pressure: 250 bar (3626 GPM)
- Oil flow: 40 l/min (10.6 GPM)

Accessories
Bolt-on Bracket AGS

Product	Item number	Load capacity (kg)	Weight (kg)
GRL-S	315-10025-000-80	800	375

+46 44 81707 | sales@rf-system.se | www.rf-system.se

Product description and accessories

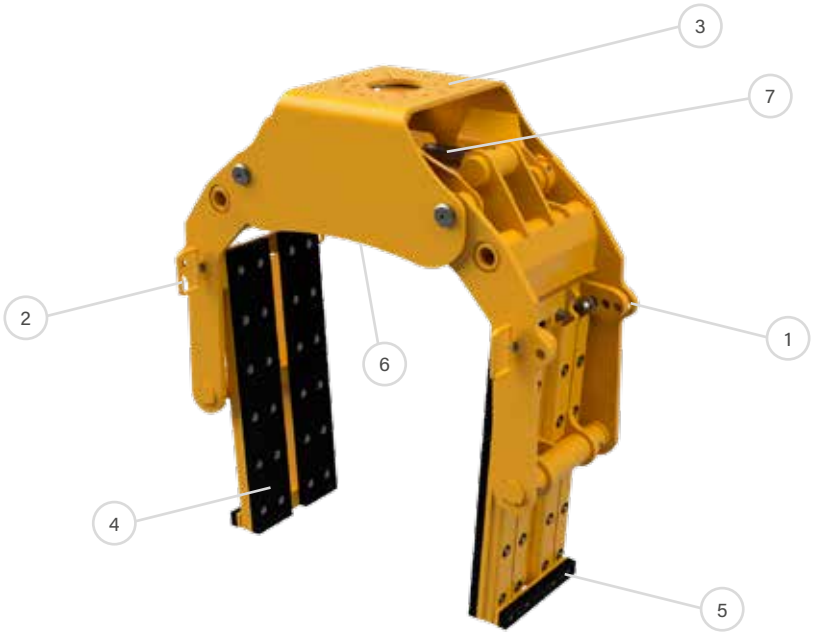

1. Locking arms in parallell position
2. Handle
3. Hole pattern for bolt-on adapter
4. Rubber coated grapple arms
5. Outer rubber protection
6. Rubber protection
7. Hydraulic cylinder

Technical specification

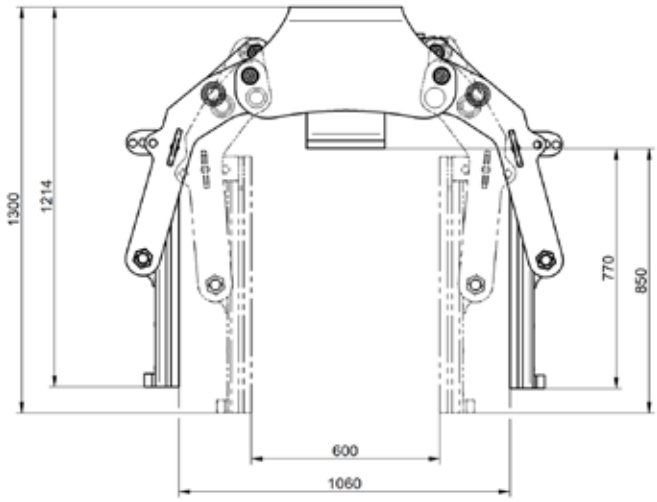

Cable Trench Lid Grapple GRL Premium

Premium grapple with wide grip width and high safety

Cable Trench Lid Grapple Premium GRL is a flexible and efficient tool for quick and safe handling of new or old pallet-stacked cable trench lids. The grapple is specially developed for handling and positioning lids in existing cable trenches. The grapple tines are parallel and equipped with a load-holding valve that provides a safe grip even if hydraulic pressure drops. Rubber grips on the tines provide a secure hold without damaging the lids. It is built for trench lids 380–1380 mm long and has adjustable grip width 270–1270 mm. Grapple width is 350 mm.

Do you have any questions? Contact us!

Safe handling
Quick and safe handling of cable trench lids

Adjustable
Adjustable parallel tines with load-holding valve

Gentle
Gentle grip with rubber grips

More information

Features
- Built for trench lids 380–1380 mm long
- Adjustable grip width: 270–1270 mm
- Load-holding valve and parallel tines

Detailed description
- Weight: 700 kg
- Max load: 800 kg
- Internal grip height: 1080 mm
- Grapple tine width: 350 mm

Machine requirements
- Recommended machine weight: 8–24 ton
- One double acting hydraulic circuit
- Max pressure: 250 bar (3626 psi)
- Oil flow: 40–60 l/min (10.6-15.8 GPM)

Accessories
Bolt-on Bracket AGS, Fully automatic quick coupler systems from all manufacturers

Product	Item number	Load capacity (kg)	Width grapple tines (mm)	For trench lid (mm)	Weight (kg)
GRL	315-02000-000-80	800	350	380 - 1380	700

+46 44 81707 | sales@rf-system.se | www.rf-system.se

Product description and accessories

1. Bolt-on adapter
2. Rubber protection
3. Rubber coated grapple arms
4. Outer rubber protection
5. Grapple arm
6. Hydraulic cylinder

Technical specification

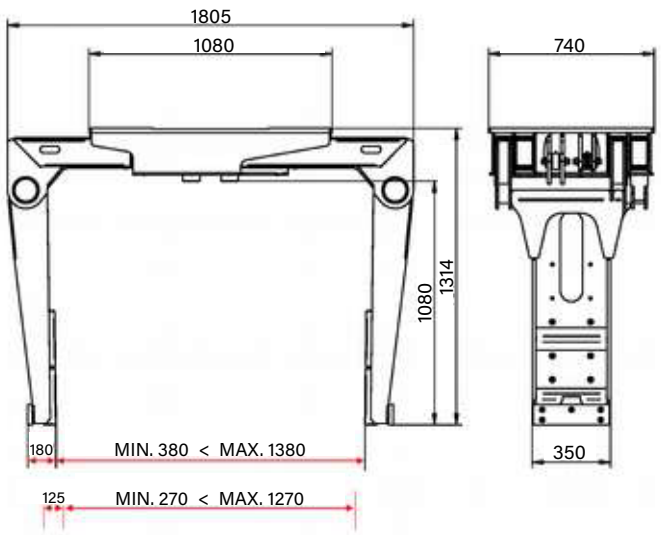

Ballast Bucket SKBS

Sturdy bucket for digging between tracks

Ballast Bucket SKBS is an effective bucket for excavating between tracks. The standard bucket is designed for track gauge 1435 mm with adjustable plunge depth, but can be designed for other track gauges if required.

The bucket is made in strong 400HBW steel, ensuring high wear resistance and long service life.

Do you have any questions? Contact us!

Long service life
Robust construction for long service life

Flexible
Adjustable plunge depth for flexible use

Adaptable
Can be designed for different track gauges

More information

Features
- Standard track gauge: 1435 mm (can be adapted)
- Manufactured in 400HBW steel

Detailed description
- Weight: 1180 kg
- Width: 2700 mm
- Height: 1060 mm

Machine requirements
- Recommended machine weight: 12–24 ton

Product	Item number	Bracket	Width (mm)	Depth (mm)	Volume (liter)	Weight (kg)
SKBS	605-00107-777-27	S45	2700	800	1140	1180
SKBS	605-00109-777-27	S50	2700	800	1140	1180
SKBS	605-00111-777-27	S60	2700	800	1140	1180

+46 44 81707 | sales@rf-system.se | www.rf-system.se

Product description and accessories

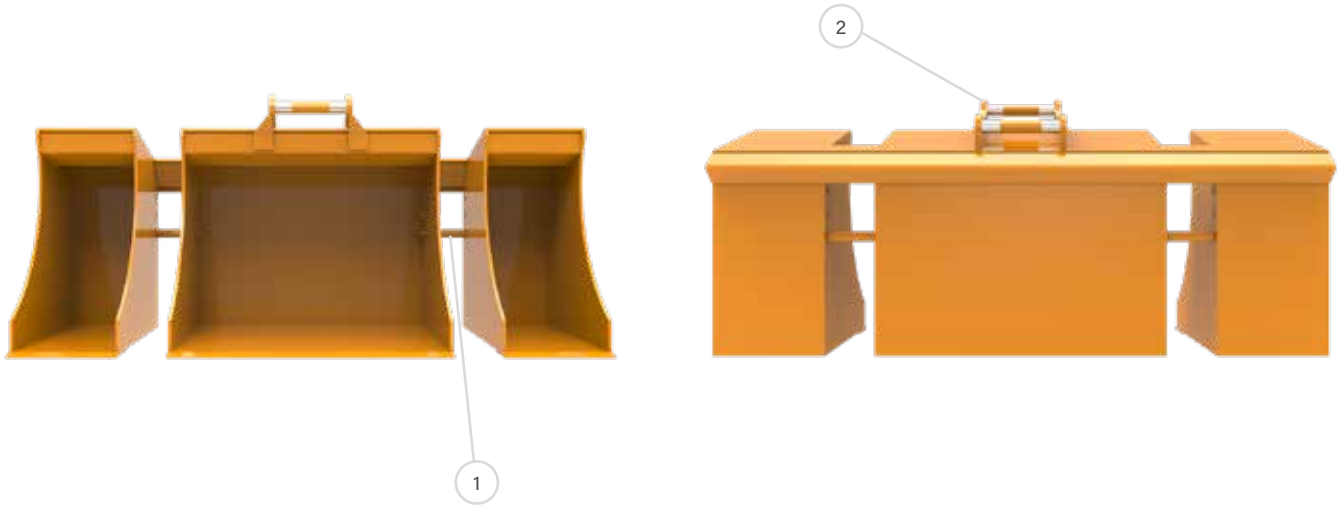

1. Axle for adjustable depth

2. Bracket

Technical specification

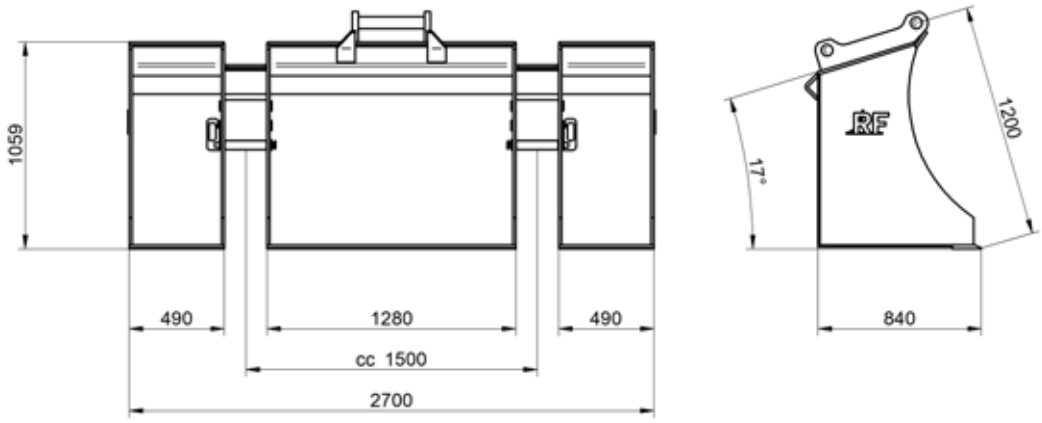

View in action

Attachments / **Railway**

Dual Rotor Brush ROB

Powerful steel brush for tough sweeping

Dual Rotor Brush ROB is an effective brush that cleans both sides of the rail waist. The brush is adjustable to fit different rail sizes and varying brush wear, and the angle between the brush and the supporting wheel running along the rail can easily be adjusted for optimal sweeping.

Do you have any questions? Contact us!

Efficient
Effective brushing on both sides of the rail waist

Adjustable
Adjustable for different rail sizes

Flexible
Adjustable brush angle for best results

Different brush types
Possibility to choose different brush types

More information

Features
- Steel brush able to withstand rough use
- Adjustable for varying brush wear
- Angle adjustable in relation to supporting wheel

Detaljerad beskrivning
- Weight: 290 kg
- Brush disc diameter: 750 mm

Machine requirements
- One double acting hydraulic circuit
- Max pressure: 200 bar (2900 psi)
- Oil flow: 60–120 l/min (15.8-31.7 GPM)

Accessories
Bolt-on adapter AGS SKB, Fully automatic quick coupler systems from all manufacturers

Product	**Item number**	**Motor** (ccm)	**Diameter** (mm)	**Weight** (kg)
ROB 2020	195-33000-179-09	400 x 2	750	290

+46 44 81707 | sales@rf-system.se | www.rf-system.se

Product description and accessories

1. Bolt-on adapter
2. Motor
3. Brush disc
4. Steel brush
5. Rail roller
6. Width adjustment
7. Height adjustment
8. Angle adjustment
9. Single Rotor Brush

Dozer Blade SHB

Versatile blade for ballast, snow and ice

Dozer Blade SHB is designed for work on railway and can be used for clearing ballast, snow or ice. The blade has a reversible edge and replaceable rubber blade, making it easy to adapt to different tasks, for example ploughing ballast to reveal cables.

Do you have any questions? Contact us!

Flexible use
Reversible edge for flexible use

Adaptable
Replaceable rubber blade

Versatile
Suitable for ballast, snow and ice

More information

Features
- Robust construction for railway environment
- Adaptable with rubber blade
- Suitable for different types of clearing work

Detailed description
- Weight: 240 kg
- Length: 2400 mm

Product	Item number	Bracket	Length (mm)
SHB	072-00107-000-24	S45	2400
SHB	072-00109-000-24	S50	2400
SHB	072-00111-328-24	S60	2400

+46 44 81707 | sales@rf-system.se | www.rf-system.se

Product description and accessories

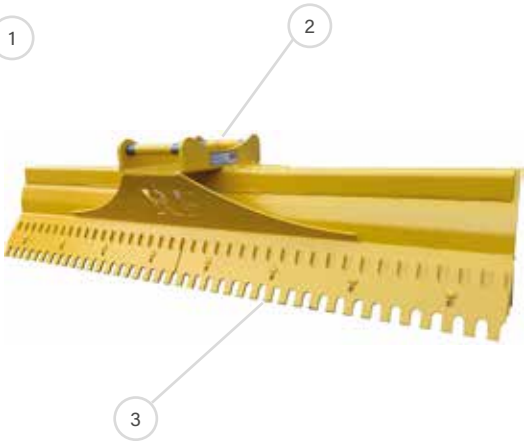

1. Rubber blade

2. Bracket

2. Reversible ice blade

Attachments / **Railway**

Rail Clamshell Bucket C18VE/RIG-Rail

Efficient bucket for excavating between sleepers

Rail Clamshell Bucket C18VE is adapted for excavating between sleepers and offers an economical and flexible solution. The shells can be replaced to easily switch between functions. The bucket carrier, hydraulics and bearings are integrated into the main module.

Do you have any questions? Contact us!

High safety
Safe handling with non-return valve

Flexible
Replaceable shells and accessories

Robust and durable
Reinforced main frame

Long service life
500 HB steel in the cutting edges

More information

To endure the forces caused by its rigid mounting, the main carrier of this C18VE model is specially reinforced. The 280 mm (11 in) wide shells have extra reinforced side walls in 15 mm (0.6 in) Hardox.
A non-return valve ensures continuous load safety of the load, even if the pressure drops. The bucket is suitable for excavators with an operating weight between 13 and 18 tons.

Advantages
- Safe handling with non-return valve
- Flexible with replaceable shells and accessories
- Robust and durable constructionl
- Long service life wnsured through 500HB steel in the cutting edges and a generously dimensioned bearing system with special coating
- Excellent digging performance thanks to high closing forces
- Low overall height mades it ideal for railway applications

Features
- Robust and sustainable design for long life cycle
- Hydraulics integrated into the main frame

Detailed description
- Weight: 315 kg (excluding bracket and accessories)
- Height: 1280 mm (including accessories)
- Max load: 4500 kg

Excavator requirements
- Recommended operating weight: 13–18 ton
- Operating pressure: maximum 320 bar (4641 psi)
- Pump capacity: 75–150 l/min (19.8-39.6 GPM)

Accessories
Bolt-on Bracket AGS, Fully automatic quick coupler systems from all manfacturers, Shells with width 280 to 1000 mm, Rail grapple, Rotator for excavator, Rotator for crane mounting

Product	Width E (mm/in)	Opening A (mm/in)	Height C max. (mm/in)	Length F (mm/in)	Volume (liters/c.y.)	Number of teeth	Weight (kg/lbs)	Load Capacity (kg/lbs)
C18VE-28/RIG-Rail	280 / 11.0	1330 / 52.4	1280 / 50.4	1020 / 40.2	60 / 0.08	3	475 / 1045	4500 / 9900

Package consists of: hydraulic carrier unit for rigid mount, shells with bolt-on teeth, 2 welded eyes and non-return valve

+46 44 81707 | sales@rf-system.se | www.rf-system.se

Product description and accessories*

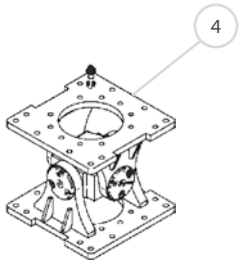

1. Hole pattern for adapter

2. Cylinder

3. Exchangeable shells and accessories

4. Optional: Cardanic joint

***accessories - see next page**

Technical specification

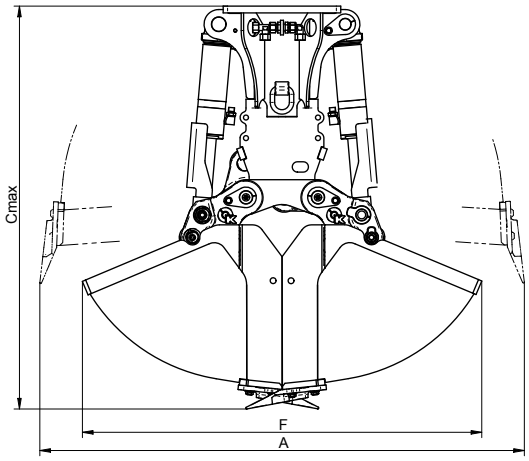

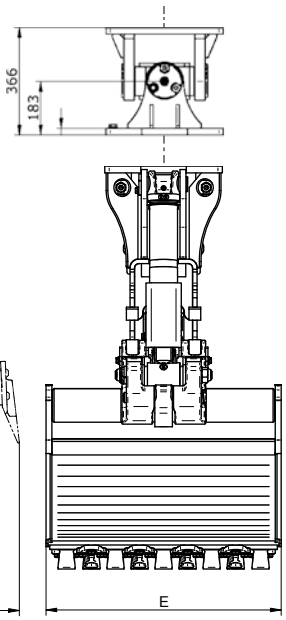

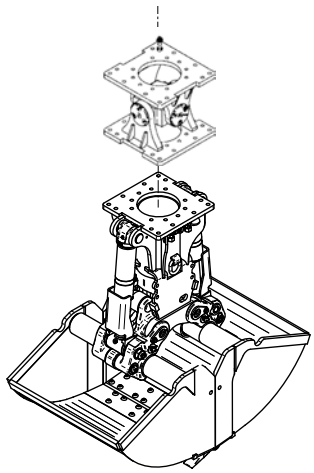

Exchangeable Shells for C18VE

Exchangeable Shells for C18VE - rigid and cardanic mount								
Shells are interchangeable and available in all widths. Fast exchange thanks to shell exchange aid kit.								
PRODUCT	WIDTH (mm/in)	OPENING (incl. teeth) (mm/in)	TOTAL HEIGHT (mm/in)	VOLUME (liters/c.y.)	NUMBER OF TEETH	LOAD CAPACITY (kg/lbs)	CLOSING FORCES (kN/lbf)	WEIGHT shells only (kg/lbs)
Excavating Shells			C18VE-40S	C18VE-28S				
C18VE-28S-Rail	280 / 11.0	1330 / 52.4	1500 / 59	60 / 0.08	3	4500 / 9900	54 / 11880	150 / 330
C18VE-40S-Rail	400 / 15.7	1330 / 52.4	1500 / 59	100 / 0.13	3	4500 / 9900	54 / 11880	170 / 374
C18VE-50S-Rail	500 / 19.7	1330 / 52.4	1500 / 59	125 / 0.16	5	4500 / 9900	54 / 11880	185 / 407
C18VE-60S-Rail	600 / 23.6	1330 / 52.4	1500 / 59	150 / 0.19	5	4500 / 9900	54 / 11880	215 / 473
C18VE-80S-Rail	800/ 31.5	1330 / 52.4	1500 / 59	200 / 0.26	7	4500 / 9900	54 / 11880	265 / 583
C18VE-100S-Rail	1000 / 39.4	1330 / 52.4	1500 / 59	250 / 0.33	9	4500 / 9900	54 / 11880	315 / 693
Sleeper Grab Tines								
C18VE-50S RG	500 / 19.7	1250 / 49.2	1400 / 55.1	-	-	4500 / 9900	44 / 9680	130 / 286
Multi Purpose Tines								
C18VE-60S A	590 / 23.2	1660 / 65.4	1625 / 64.0	180 / 0.24	5	4500 / 9900	41 / 9020	340 / 748
Well Shaft Shells								
C18VE-97S WSG	Ø970 / 38.2	970 / 38.2	1410 / 55.5	110 / 0.14	5	4500 / 9900	65 / 14300	170 / 374

Note: larger shells available on request

+46 44 81707 | sales@rf-system.se | www.rf-system.se

Trench Bucket SKK

Digging Bucket SKD
with teeth

Digging Bucket SKD
without teeth

Grading Bucket SKP

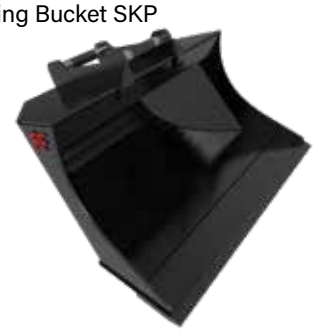

Loader Grading Bucket SKL

Buckets & Others

Smart, robust and durable buckets specially designed for tiltrotators

Standard - We have a standard range of buckets including the most common bucket models and sizes.

Special - Specially adapted buckets for specific needs for railway works. We also offer buckets designed according to you own requested measurements.

Construction - Our buckets are manufactured and continuously improved in consultation with contractors with long experience, but also together with young entrepreneurs with new ideas.

Quality - Angles, plate thickness and quality of steel are selected to fit the buckets' purpose and adapted to the power of the excavators that will be using them.

Optimized - The buckets are optimized for maximum durability combined with lowest weight, in order to reduce the machine's fuel consumption and environmental impact.

Do you have any questions? Contact us!

Others

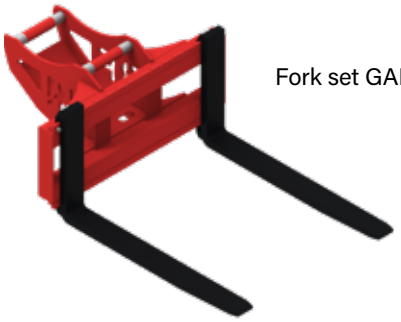

Fork set GAF - Mechanical forks

Hydraulic Fork set GAH - Hydraulic forks

Railway
Equipment for quick coupler & crane

+46 44 81707 | sales@rf-system.se | www.rf-system.se

KINSHOFER

CAT

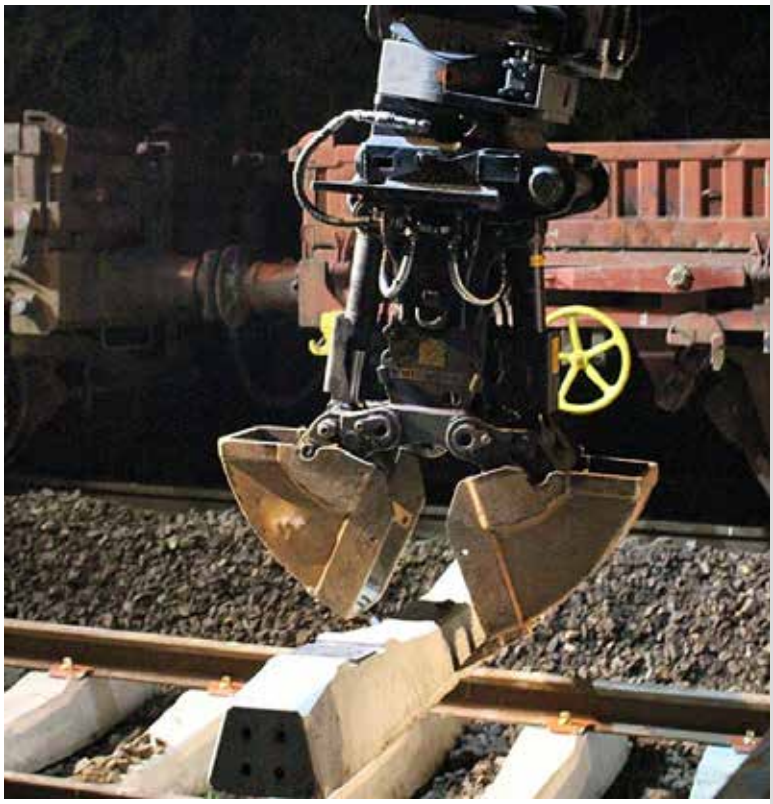

KINSHOFER

Attachments / **Railway**

Ballast Tamper with integrated rotation RST03HD

High frequency vibrating unit for quick ballast packing

Using a RST03HD ballast tamper with rotation, the packing of ballast under sleepers is not only fast, but also efficient and economical. Ideal for road-rail excavators with 14t / 30800 lbs up to 24t / 52800 lbs operating weight. Suitable for all kinds of sleepers.

Do you have any questions? Contact us!

Efficient
Complete with high frequency vibrating unit and rotation

Flexible
Adjustable arms and force

More information

The strong, silent compressor destabilizes the gravel ballast, while the built-in vibration unit is running. The four arms are thrust into the gravel and pack it by vibrating. They move alongside and below the sleeper into the ground and tamper optimally.

Advantages
- Low weight
- High frequency
- Low noise operationl

Features
- Strong vibration rubbers for low vibration against the machine
- Adjustable tamping depth for concrete sleepers or for steel and timber ties

Detailed description
- Weight: 1025 kg

Excavator requirements
- Recommended operating weight: 14–24 ton
- Three hydraulic circuits needed, two of them double effective (open/close and rotation) and one hammer line (vibration), with free line to the tank and overflow oil line
- Operating pressure (open/close/vibration): max 150 bar / 2160 psi
- Operating pressure (rotate): max 140 bar (2016 psi)
- Rec. oil flow (open/close): 50–85 l/min (13.2-22.5 GPM)
- Rec. oil flow (vibration): 40–45 l/min (10.6-11.9 GPM) (free line to tank required)
- Rec. oil flow (rotate): 25–45 l/min (6.6-11.9 GPM)

Accessories
Bolt-on adapter, Supporting rack for transport for RST03HD

Product	Gripping range A (mm/in)	Length B (mm/in)	Height C (mm/in)	Width E (mm/in)	Gripper elements (pcs)	Compaction force (kg/lbs)	Weight (kg/lbs)	Load Capacity (kg/lbs)
RST03HD	195 - 650 / 7.8 - 25.6	840 / 33.1	1600 / 63	635 / 25	4	7500 / 16500	1025 / 2255	4500 / 9900

Package consists of: ballast tamper, vibrating unit, Kinshofer rotation incl. 2 motors

+46 44 81707 | sales@rf-system.se | www.rf-system.se

Product description and accessories

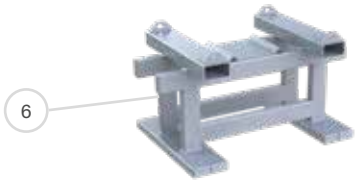

1. Vibrating unit and rotation
2. Hydraulic cylinder for legs
3. Bar strap
4. Legs for compacting
5. Adjustment plate for other packing depth
6. Transport support

Technical specification

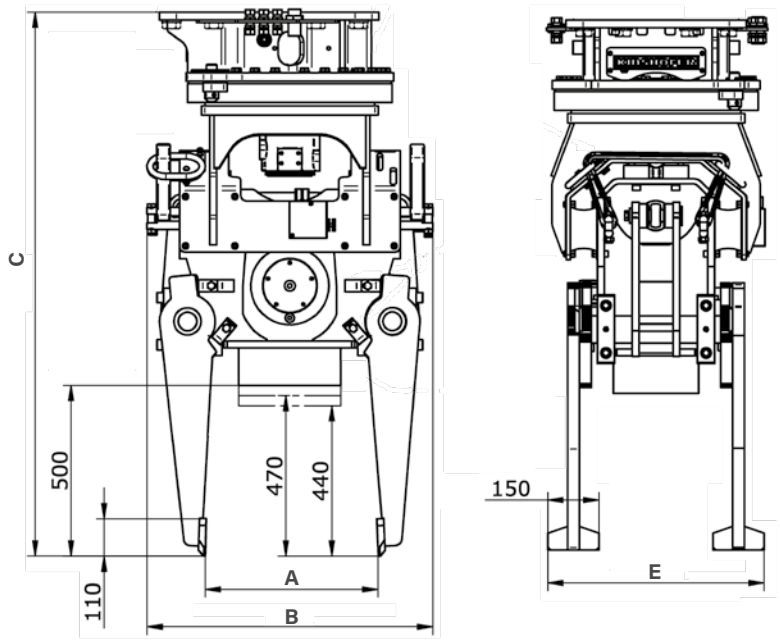

Sleeper Layer RUS

Center- or end-gripped for quick sleeper laying

Several concrete sleepers are clamped together at the same time by hydraulic grippers and then layed into the ballast bed. This saves time compared to placing sleepers individually. The position of the traversing arms can vary within the specified range.

The center gripped RUS model is suitable for narrow areas close to sidetracks and foundations, as the layer grabs the sleeper in the center.

Do you have any questions? Contact us!

Efficient
Quick and safe sleeper laying

Flexibility
Suitable for nearly all types of waisted sleepers

Safety
A special holding valve provides a safe grip - even if pressure drops

More information

Features
- Center- or end-gripping arms
- Precise positioning thanks to the mounted 10t rotator with 4 oild ducts and hose guard

Detailed description
- Weight: 1700 kg (end gripping arms)
- Weight: 1390 kg (center gripping arms)

Excavator requirements
- Recommended operating weight: 14–24 ton
- Three hydraulic circuits or two hydraulic circuits plus one solenoid valve needed
- Operating pressure: max 200 bar / 2880 psi
- Recommended. oil flow: 25 – max 50 l/min (6.5 - max 13 GPM)

Accessories

T630 cardanic — upper suspension w pendulum damper for "Atlas"
T650 rigid — bolt-on adapter for "Atlas" quick coupler T620
KM 980-2 2t-8t c — solenoid valve KM 980-2 for 12/24 V. Complete attachment kit including assembly components for extension to the third hydraulic control circuit

Product	Operating weight (t)	Gripping range A (mm)	Length B (mm)	Height C (mm)	Width E (mm)	Number of grip tongs (pcs)	Jaw width (mm)	Sleeper width (mm)	Weight single sleeper max (kg)	Type of arms	Weight (kg)
RUS 05	14 - 24	150 - 265	2820	1553	825	5	330	300/320	350	Center-gripping	1390
RUS2 05	14 - 24	2400 - 2800				5	180	280/300/320	350	End-gripping	1700

Package consists of: sleeper layer, Kinshofer rotator with hose guard, upper suspension with pendulum damper KM511, counter-balance valve, connection plate

KINSHOFER Rotator

Product	Upper connection (width x pin-Ø) (mm/in)	Torque (Nm/ft.lbs)	Moment of deflection (Nm/ft.lbs)
KM 10 F173-45-4DD	100 x 45 / 3.9 x 1.8	2000 / 1475	12000 / 8850

Continuous rotation and foru oil passages. Overload protection is ensured by pressure relief valves

+46 44 81707 | sales@rf-system.se | www.rf-system.se

Product description and accessories

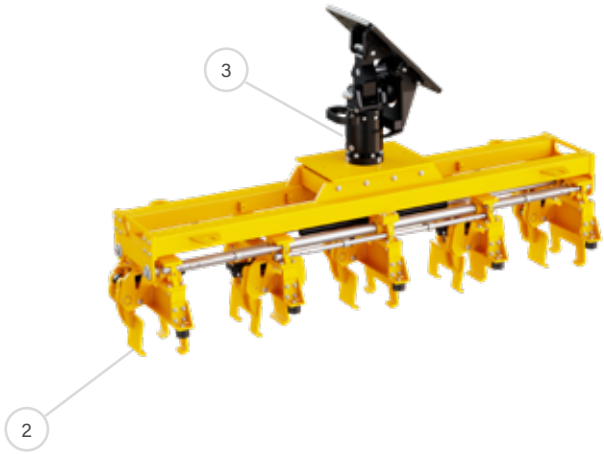

1. End-gripping arms

2. Center-gripping arms

3. Rotator

Technical specification

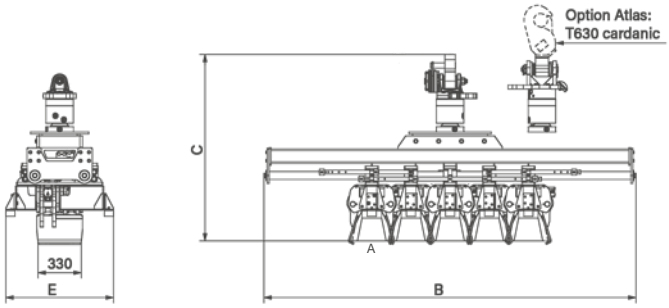

RUS05

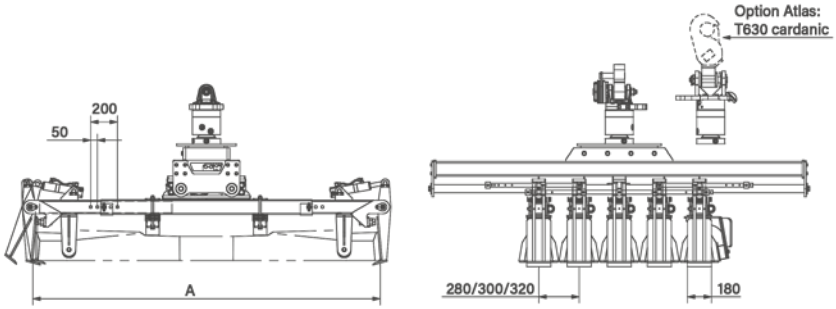

RUS2 05

Attachments / **Railway**

Sleeper Changer with integrated rotator RBS20

Flexible sleeper changer with integrated rotator

Sleeper Changer RBS20 is equipped with an integrated rotator, enabling use directly on the excavator without a tiltrotator.
It features bolt-on ballast buckets with adjustable depth for excavation between the tracks and is designed to handle both BiBloc sleepers and full-length sleepers.

Do you have any questions? Contact us!

Integrated rotator
Enabling use without tiltrotator

Handling
Designed to handle BiBloc sleepers and full-length sleepers

Safe grip
Load-holding valve for safe grip, even if hydraulic pressure drops

More information

The large shield with buckets clears the track from the ballast. The sleeper is then grabbed by the hydraulically operated gripper and pulled out from the ballast bed. Once the new sleeper is placed, the shield is used to bring back and level the ballast again.
Also available with HPX cylinderless grapple drive units.

Advantages
— Reduced wear due to the use of HARDOX quality steel

Features
— Adjustable plunge depth of the shield via adjustable limit rods
— 3 bolt-on ballast buckets, exchangeable in a few minutes
— Direct mounting on the excavator
— 360° endless rotation due to integrated 15t-rotator
— Short version with adjusted kinematics RBS20-S: gripping unit directly mounted to the shield
— BiBloc sleepers can be gripped hydraulically by spreading the clamps

Detailed description
— Max load: 2000 kg
— Width: 2800 mm

Excavator requirements
— Recommended operating weight: 14–24 ton
— Two hydraulic circuits
— Operating pressure (open/close): max 200 bar (2880 psi)
— Operating pressure (rotate): max 350 bar (5040 psi)
— Recommended oil flow (open/close): 50–75 l/min (13.2-19.8 GPM)
— Recommended oil flow (rotation): 20–50 l/min (5.3-13.2 GPM)

Accessories
Bolt-on Bracket AGS

Product	Gripping range (mm/in)	Length D (mm/in)	Height C (mm/in)	Width E (mm/in)	Gripper elements (pcs)	Load Capacity (kg/lbs)	Weight (kg/lbs)
RBS20	240 - 300 / 9.5 - 11.8	2800 / 110.2	1320 / 52.0	1840 / 72.4	4	2000 / 4400	1260 / 2770
RBS20-S	240 - 300 / 9.5 - 11.8	2800 / 110.2	1220 / 48.0	1570 / 61.8	4	2000 / 4400	1160 / 2552

Package consists of: sleeper changing unit with ballast shield and 3 bolt-on ballast buckets, KINSHOFER rotator KM 15 F273/273, non-return valve

+46 44 81707 | sales@rf-system.se | www.rf-system.se

Technical specification

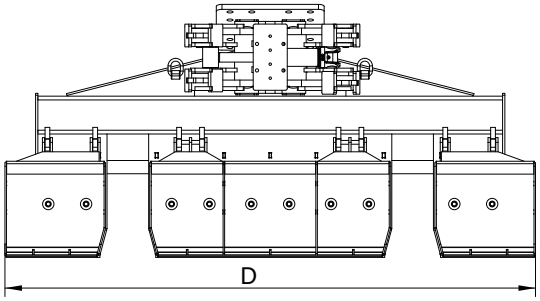

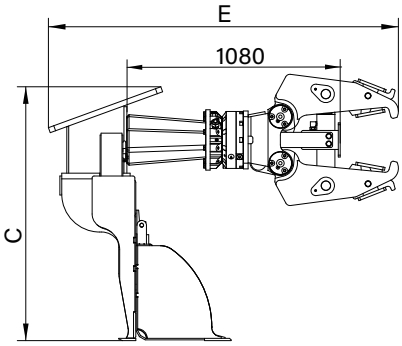

RBS20

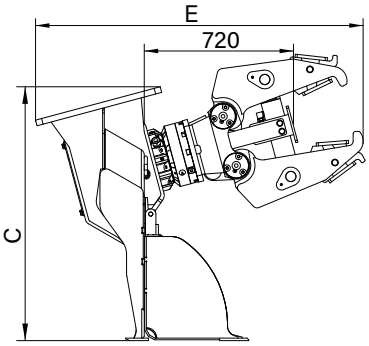

RBS20-S

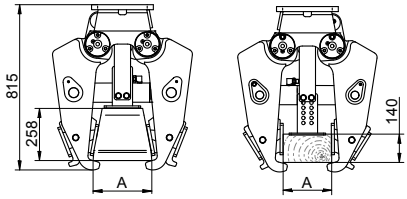

Internal pads and adjustable plunge depth allow the gripping of MonoBloc sleepers of different sizes and material (concrete and wood)

External pads to grip BiBloc concrete sleepers by opening the hydraulical gripper

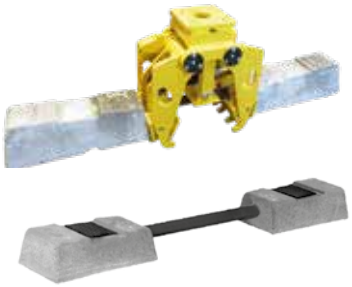

Attachments / **Railway**

Sleeper Changer with integrated rotator RBS20HPX

Flexible sleeper changer with integrated rotator

Sleeper Changer RBS20 is equipped with an integrated rotator, enabling use directly on the excavator without a tiltrotator. It features bolt-on ballast buckets with adjustable depth for excavation between the tracks and is designed to handle concrete sleepers as well as wooden or steel sleepers of different shapes and sizes.

Do you have any questions? Contact us!

Integrated rotator
Enabling use without tiltrotator

Handling
Designed to handle concrete, wooden or steel sleepers

Flexible
HPX cylinderless grapple drive unit and bolt-on blallast buckets

Safe grip
Load-holding valve for safe grip, even if hydraulic pressure drops

More information

The large shield with buckets clears the track from the ballast. The sleepter is then grabbed by the hydraulically operated gripper and pulled out from the ballast bed. Once the new sleeper is placed, the shield is used to bring back and level the ballast again.
Also available without HPX cylinderless grapple drive units.

Advantages
— Reduced wear due to the use of HARDOX quality steel

Features
— Adjustable plunge depth of the shield via adjustable limit rods
— 3 bolt-on ballast buckets, exchangeable in a few minutes
— Direct mounting on the excavator
— 360° endless rotation due to integrated 15t-rotator
— Short version with adjusted kinematics RBS20HPX-S: gripping unit directly mounted to the shield

Detailed description
— Max load: 2000 kg
— Width: 2800 mm

Excavator requirements
— Recommended operating weight: 14–24 ton
— Two hydraulic circuits
— Operating pressure (open/close): max 200 bar (2880 psi)
— Operating pressure (rotate): max 350 bar (5040 psi)
— Recommended oil flow (open/close): 25–75 l/min (6.6-19.8 GPM)
— Recommended oil flow (rotation): 20–50 l/min (5.3-13.2 GPM)

Accessories
Bolt-on Bracket AGS

Product	Gripping range (mm/in)	Length D (mm/in)	Height C (mm/in)	Width E (mm/in)	Gripper elements (pcs)	Load Capacity (kg/lbs)	Weight (kg/lbs)
RBS20HPX	270 - 570 / 10.6 - 22.4	2800 / 110.2	1340 / 52.8	1670 / 65.8	4	2000 / 4400	1250 / 2750
RBS20HPX-S	270 - 570 / 10.6 - 22.4	2800 / 110.2	1220 / 48.0	1280 / 50.4	4	2000 / 4400	1170 / 2574

Package consists of: sleeper changing unit with ballast shield and 3 bolt-on ballast buckets, KINSHOFER rotator KM 15 F273/273 and HPXdrive, non-return valve

+46 44 81707 | sales@rf-system.se | www.rf-system.se

Technical specification

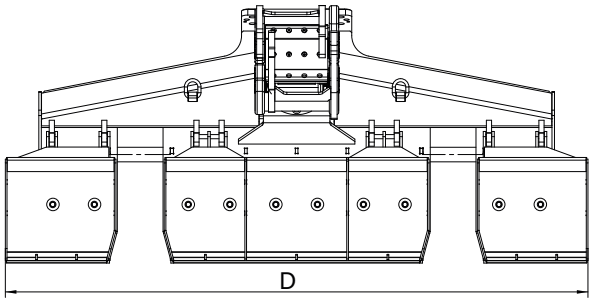

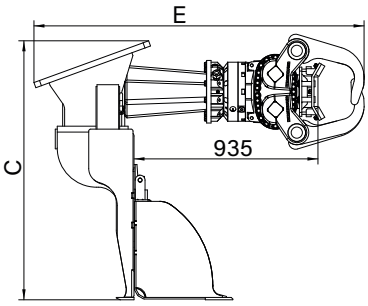

RBS20HPX

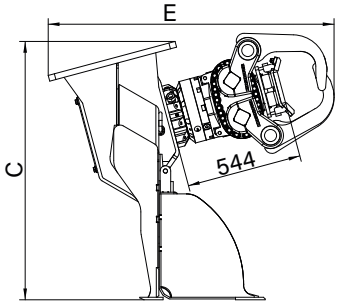

RBS20HPX-S

Attachments / **Railway**

Rail Grapple with HPXdrive KM 632 HPX-E Rail

Loading and unloading of rails and handling single sleepers

The rail grapple with its HPXdrive is used tor the loading and unloading of rails, but also, with care, handle single sleepers. A non-return valve secures constant pressure even in case of unexpected pressure drop. The revolutionary HPXdrive technology guarantees a reliable and virtually mantenance free attachment.

Do you have any questions? Contact us!

Precise positioning
Thanks to the mounted 360° rotator

Profitability
Low maintenance costs and longer life cycle

Reliable
Reliability of the HPXdrive

Safe grip
Non-return valve secures constant pressure, even if pressure drops

More information

Reliability of the HPXdrive! The movement of the arms of the grapple is generated by two hollow shafts, which run opposed and have a helix thread, hydraulically driven by a single piston. No more hydraulic cylinder

Features
- Longer life cycle up to 50%. Self-lubrication: The drive unit runs in a permanent oil bath. The compact design makes the HPXdrive resistant to dirt and debris.
- Versatility with different types of shells that can easily be refitted onto the driving unit.
- Profitability through low maintenance costs and longer life cycle
- Precise positioning thanks to the mounted 360° rotatorr
- Constant closing force during the entire opening and closing process

Detailed description
- Max load: 2000 kg
- Width: 1000 mm

Excavator requirements
- Operating pressure: max 260 bar (3770 psi)
- Recommended oil flow: 50 – max 75 l/min (13.2 - max 19.8 GPM)

Accessories

KM501 13t-25t	upper suspension without pendulum damper
KM511 13t-25t	upper suspension with pendulum damper

Rail Grapple KM 632HPX-E Rail with 15t KINSHOFER Rotator

Product	Width (mm/in)	Height (mm/in)	Load Capacity (kg/lbs)	Weight (kg/lbs)
KM 632HPX-E Rail	1000 / 39.4	820 / 32.3	2000 / 4400	385 / 847

Package consists of: rail grapple, rotator KM 15 F273-273 incl. head plate (pin-Ø 60 mm / 2.76 in), non-return valve

KINSHOFER Rotator

Product	Upper connection (borings / Ø-hole pattern) (mm/in)	Torque (Nm/ft.lbs)	Moment of deflection (Nm/ft.lbs)
KM 15 F273/273	10 xM16 / ø 273/10.8	2000 / 1475	50000 / 36875

Direct connection to HPXdrive, no short hoses. Continuous rotation. Overload progtection is ensured by pressure relief valves

+46 44 81707 | sales@rf-system.se | www.rf-system.se

Product description and accessories

1. Grapple open

2. With 4t rotator for use on loader cranes

Technical specification

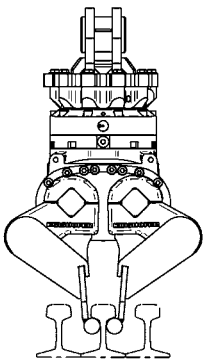

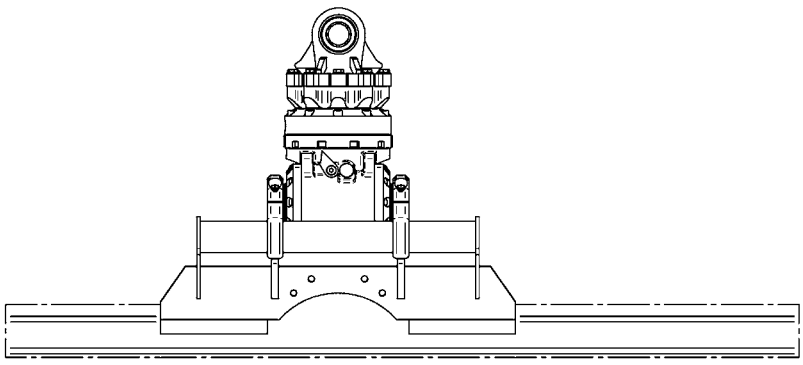

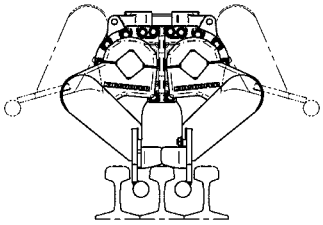

Typ: S 7 Typ: UIC 54E Typ: UIC 54 Typ: 60E1

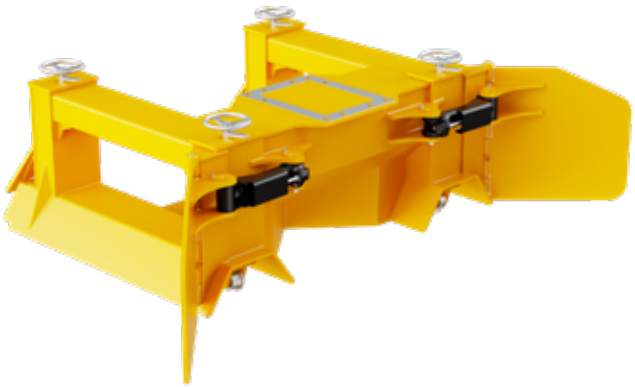

Double Ballast Plough DBP

Efficient plough for even ballast distribution

Double Ballast Plough DBP is designed for efficient handling of ballast and gravel in railway tracks and is adapted for excavators with operating weight 14–20 tons. The plough distributes the ballast evenly as it is pushed along the tracks, and the side wings can be angled ±45° for best results.
The plough is adapted for Swedish standards and features four adjustable settings for the plough depth, making it flexible depending on work requirements. The design is robust and without protruding parts, minimizing the risk of damage. Different mounting plates are available to fit various machines.

Do you have any questions? Contact us!

Efficient
Simple and efficient ballast distribution

Angled wings
Side wings adjustable ±45°

Robust design
Low risk of damage

Easy adjustment
Adjustable plough depth

More information

Features
- Four adjustable settings for plough depth
- Robust and safe design
- Hydraulically adjustable side wings

Detailed description
- Weight: 1150 kg (excluding bracket)
- Width: 3200 mm
- Length: 2120 mm

Excavator requirements
- Recommended operating weight: 14–20 ton
- Option 1: Two double acting hydraulic circuits
- Option 2: One double-acting hydraulic circuit + one solenoid valve
- Recommended oil flow: 50 - max. 75 l/min (13.2 - max. 19.8 GPM)
- Max pressure: 320 bar (4610 psi)

Accessories
Bolt-on Bracket AGS

Product	Item number	Length (mm)	Height (w/o coupling) (mm)	Width (mm)	For rail distance (mm)	Tilt angle side flaps (°)	Weight (kg)
DBP 14-SP20H	168-21000-011-45	2120	750	3200	1505	±45	1150

+46 44 81707 | sales@rf-system.se | www.rf-system.se

Product description and accessories

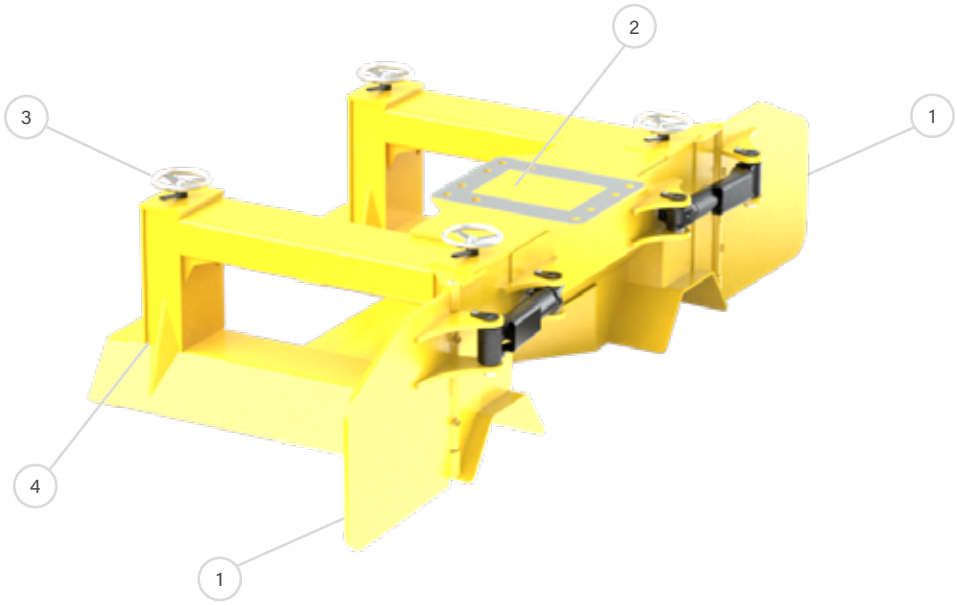

1. Hydraulical side wings folded away
2. Hole pattern for adapter
3. Adjustment point plough depth
4. Rail wheels

Technical specification

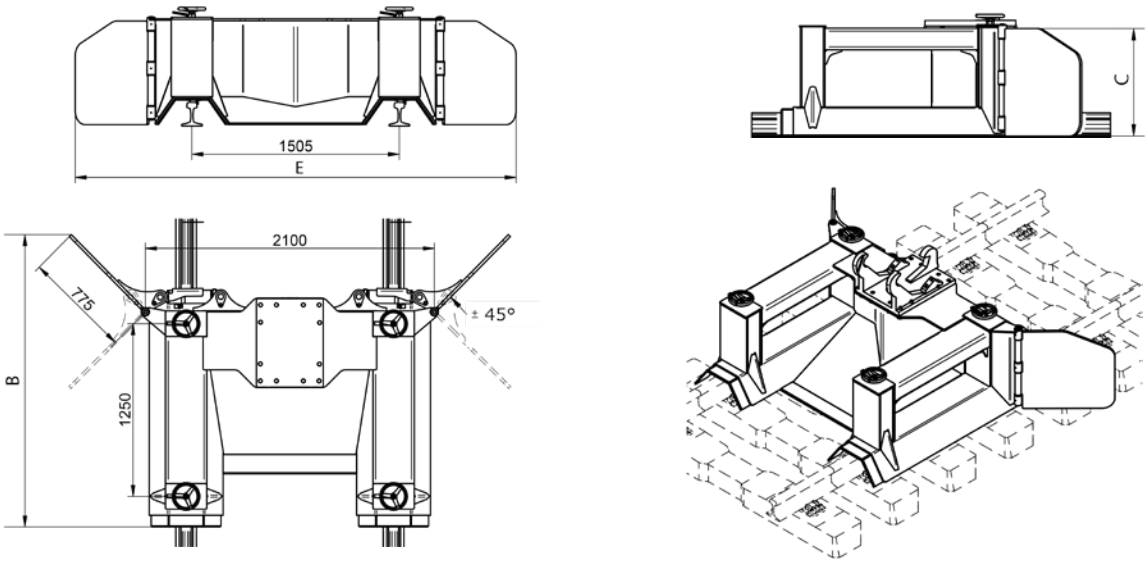

Length B max (mm)	**Height C** (w/o coupling) (mm)	**Width E max** (mm)	**For rail distance** (mm)	**Tilt angle side flaps** (°)
2120	750	3200	1505	±45

View in action

Attachments / **Railway**

Mobile Rail Cutter RC30

Mobile rail cutter for controlled demolition

Mobile Rail Cutter RC30 from Demarec is specially developed for controlled demolition of railway lines and scrapping rails. It can cut all current Vignole rails (flat bottom rails) with standard quality up to 900 N/mm² and profile size "S7" to "UIC 60". Rails exceeding 900 N/mm² or with head hardening are excluded. The wear of the cutters depends on the quality of the rails.

Do you have any questions? Contact us!

Controlled demolition
Reversible edge for flexible use

Powerful and fast
Patented DemaPower cylinder

Safe design
Increased security - no flying scrap

More information

The patented DemaPower cylinder provides up to 20% more power, increasing efficiency. Large, heavy-duty bearings reduce wear on bushings, and the housing is made of resistant special steel. The model is available with or without built-in rotator and is designed for increased security – no flying scrap.

Features
- Suitable for Vignole rails with standard quality up to 900 N/mm² and profile size "S7" to "UIC 60"
- Patented DemaPower cylinder
- Housing made of resistant special steel
- Large, heavy-duty bearings
- Available with or without built-in rotator

Detailed description
- Weight incl. rotator: 2650 kg (excluding bracket)
- Length: 2400 mm

Excavator requirements
- Operating pressure: max 320 bar (4641 psi)
- Pump capacity: 150–250 l/min (39.6-66.0 GPM)
- Recommended operating weight: 22-35 ton

Accessories
- Bracket

Product	Description	Item number	Bracket	Length (mm)	Jaw opening (mm)	Jaw depth (mm)	Rec. operating weight (t)	Weight	Pressure	Flow
RC30	with rotator	308-00000-140-30	Hole pattern	2334	224	190	22-35	2650	320	
RC30	without rotator	308-10000-140-30	Hole pattern	2040	224	190	22-35	2300	320	

+46 44 81707 | sales@rf-system.se | www.rf-system.se

Product description and accessories

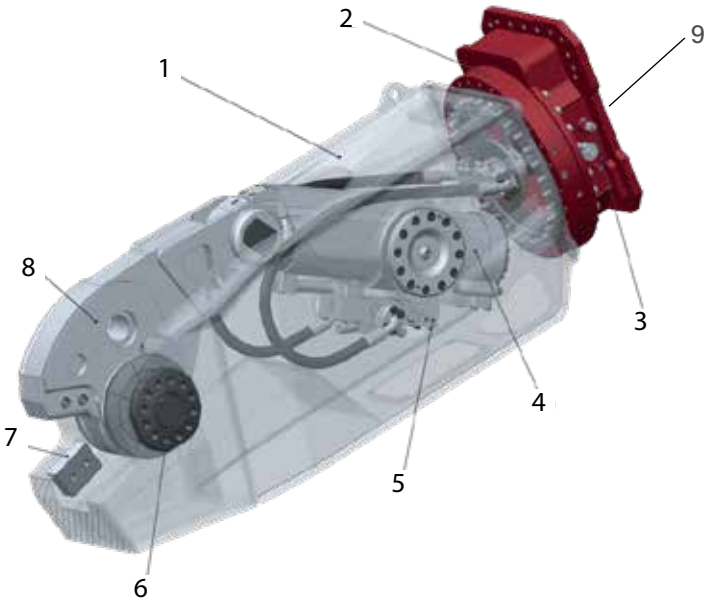

1. Compact shear body
2. Heavy duty rotation
3. DemaFilter-System in rotation circuit
4. DemaPower system
5. DemaSafety
6. Heavy duty bearing in pivot point
7. Optimal mouth design
8. Shear arm
9. Hole pattern for bolt-on adapter

Technical specification

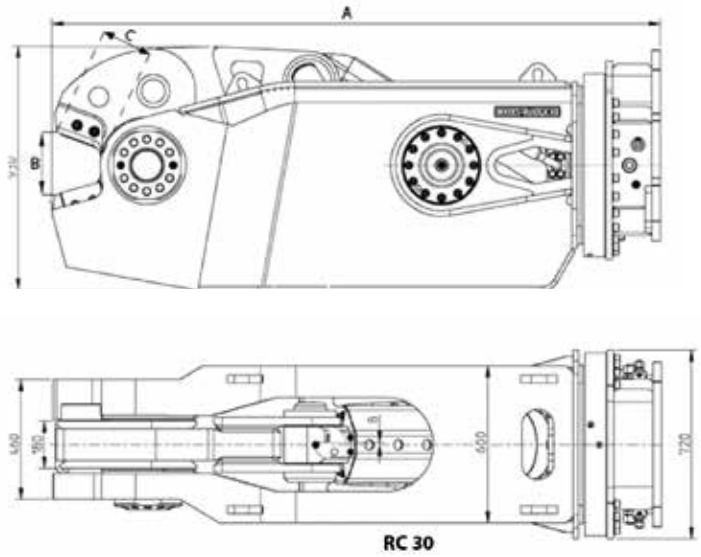

A = 2335 mm
B = 225 mm
C = 190 mm

Attachments / **Railway**

Clamshell Bucket with exchangeable shells C08VE-Rail

Exchangeable shells for different applications

Clamshell bucket with exchangeable shells and vertical cylinder for excavators from 4t / 8800 lbs to 9t / 19800 lbs operating weight - through quick and easy exchange of shells ideal for different application, for excavation operations, landscaping, trench digging, handling of logs etc. The shells can be changed in less than four minutes.

Do you have any questions? Contact us!

Economic and flexible
Exchange shells for another application

Fast and easy
Exchange of shells within 4 minutes

Efficient
Excellent digging characteristics with high closing forces

More information

Features
- Economic solution as only the shells have to be exchanged for another application - bucket carrier, hydraulic cylinder and bearings are integrated into the unit
- Long life is ensured due to the use of 500 HB steel in the manufacture of cutting edges
- Reduced wear resulting from generously dimensioned bearing system
- Excellent digging characteristics are the result of high closing forces (26 kN / 5720 lbf an an operating pressure of 32 MPa / 4608 psi)

Detailed description
- Weight: 325 kg

Excavator requirements
- Recommended operating weight: 4–9 ton
- Max pressure (open/close): 320 bar (4608 psi)
- Max pressure (rotate): 320 bar (4608 psi)
- Oil flow (open/close): 40 - max. 90 l/min (10.57 - max. 23.78 GPM)
- Oil flow (rotate): 15 - max. 50 l/min (3.96 - max. 13.21 GPM)

Accessories

KM 501 1t-8t	upper suspension without pendulum damper
KM 511 1t-8t	upper suspension with pendulum damper
KM 680 5t-8t	scraper

Product	Width E (mm/in)	Opening A (mm/in)	Height C max. (mm)	Height C min. (mm)	Volume (liters/c.y.)	Number of teeth	Capacity (kg/lbs)	Weight (kg/lbs)
C08VE-28	280 / 11.0	1330 / 52.4	1520 / 59.9	1380 / 54.3	100 / 0.13	3	3000 / 6600	325 / 715

Package consists of: clamshell bucket, bolt-on teeth, rotator with hose guard, shell exchange kit, non-return valve

+46 44 81707 | sales@rf-system.se | www.rf-system.se

Exchangeable Shells for Clamshell Bucket C08VE-S

Product	**Width E** (mm/in)	**Opening A** (mm/in)	**Volume** (liters/c.y.)	**Number of teeth**	**Capacity (**kg/lbs)	**Weight** (kg/lbs)
C08VE-28S	280 / 11.0	1330 / 52.4	100 / 0.13	3	3000 / 6600	125 / 275
C08VE-32S	325 / 12.8	1330 / 52.4	115 / 0.15	3	3000 / 6600	130 / 286
C08VE-40S	400 / 15.8	1330 / 52.4	145 / 0.19	3	3000 / 6600	135 / 297
C08VE-50S	500 / 19.7	1330 / 52.4	185 / 0.24	5	3000 / 6600	145 / 319
C08VE-60S	600 / 23.6	1330 / 52.4	220 / 0.29	5	3000 / 6600	155 / 341
C08VE-80S	800 / 31.5	1330 / 52.4	300 / 0.39	9	3000 / 6600	190 / 418

KINSHOFER Rotator

Product	**Upper connection** (width x pin-ø) (mm/in)	**Torque** (Nm/ft.lbs)	**Moment of deflection max.** (liters/c.y.)
KM 04 F140-30USE	84 x 30 / 3.3 x 1.2	1000 / 740	8500 / 6270

Continuous rotation and two oil passages. Overload protection is ensured by pressure relief valves.

Technical specification

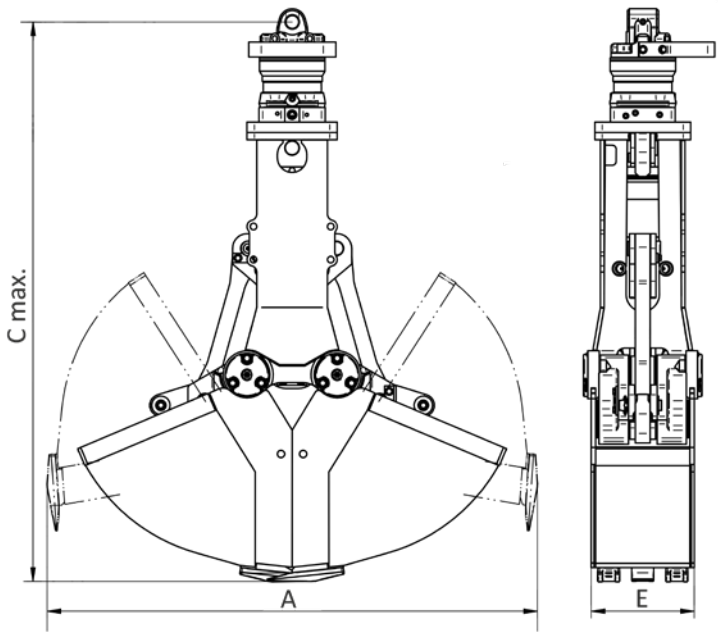

Attachments / **Railway**

Clamshell Bucket with exchangeable shells C18VE-Rail

Exchangeable shells for different applications

Clamshell bucket with exchangeable shells and vertical cylinder for excavators from 13t / 28600 lbs to 18t / 39600 lbs operating weight. Ideal for the versatile use in construction, landscaping, canal building, forestry etc. due to the fast and easy exchange of shells within only four minutes.

Do you have any questions? Contact us!

Economic and flexible
Exchange shells for another application

Fast and easy
Exchange of shells within 4 minutes

Efficient
Excellent digging characteristics with high closing forces

More information

Features

- Economic solution as only the shells are exchanged. Shell carrier, hydraulics and bearings remain unchanged
- Long life thanks to the use of cutting edge material 500 HB
- Low wear due to generously dimensioned steel bearings with special coating
- Excellent digging characteristics thanks to high closing forces
- Shells with width 280 mm / 11 in: reinforced version with 15 mm / 0.6 in strong Hardox side walls

Excavator requirements

- Recommended operating weight: 13–18 ton
- Max pressure (open/close): 350 bar (5040 psi)
- Max pressure (rotate): 320 bar (4608 psi)
- Oil flow (open/close): 40 - max. 120 l/min (10.6 - max. 31.7 GPM)
- Oil flow (rotate): 20 - max. 50 l/min (5.3 - max. 13.2 GPM)

Accessories

KM 501 13t-25t	upper suspension without pendulum damper
KM 511 13t-25t	upper suspension with pendulum damper
T630 cardanic	upper suspension with pendulum damper for "Atlas"
KM 680 C18VE-Rail	scraper

Product	Width E (mm/in)	Opening A (mm/in)	Height C max. (mm/in)	Volume (liters/c.y.)	Number of teeth	Capacity (kg/lbs)	Weight (kg/lbs)
C18VE-28-Rail	280 / 11.0	1330 / 52.4	1500 / 59.0	60 / 0.08	3	4500 / 9900	540 / 1188
C18VE-40-Rail	400 / 15.7	1330 / 52.4	1500 / 59.0	100 / 0.13	3	4500 / 9900	560 / 1232
C18VE-50-Rail	500 / 19.7	1330 / 52.4	1500 / 59.0	125 / 0.16	5	4500 / 9900	575 / 1265
C18VE-60-Rail	600 / 23.6	1330 / 52.4	1500 / 59.0	150 / 0.19	5	4500 / 9900	605 / 1331
C18VE-80-Rail	800 / 31.5	1330 / 52.4	1500 / 59.0	200 / 0.26	7	4500 / 9900	655 / 1441
C18VE-100-Rail	1000 / 39.4	1330 / 52.4	1500 / 59.0	250 / 0.32	9	4500 / 9900	705 / 1551

Package consists of: clamshell bucket, bolt-on teeth, KINSHOFER rotator with head plate Kinshofer, hose guard, two welded hooks, shell exchange kit, non-return valve

KINSHOFER Rotator

Product	Upper connection (width x pin-ø) (mm/in)	Torque (Nm/ft.lbs)	Moment of deflection max. (liters/c.y.)
KM 10 F275-60	125 x 60 / 4.9 x 2.4	1500 / 1105	14000 / 10325

Continuous rotation and two oil passages. Overload protection is ensured by pressure relief valves.

+46 44 81707 | sales@rf-system.se | www.rf-system.se

Technical specification

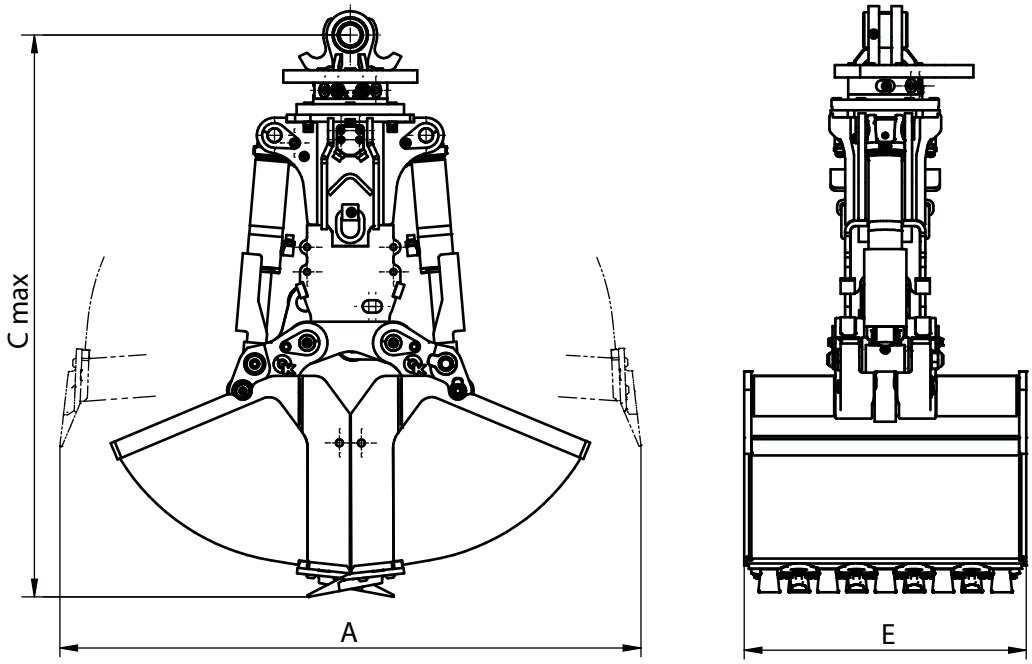

Attachments / **Railway**

Clamshell Bucket for rigid mount w rotation C18VE-HD

Exchangeable shells for different applications

Clamshell bucket with exchangeable shells and two vertical cylinders equipped with a sturdy rotation and thus ideal for the rigid mount use on excavators from 13t / 28600 lbs to 18t / 39600 lbs operating weight.

Do you have any questions? Contact us!

Economic and flexible
Exchange shells for another application

Rotation
Strong and sturdy rotation

Efficient
Excellent digging characteristics with high closing forces

More information

Features
- Economic solution as only the shells are exchanged. Shell carrier, hydraulics and bearings remain unchanged
- Long life thanks to the use of cutting edge material 500 HB and a generously dimensioned bearing system with special coating
- Low overall height - ideal for rail applications
- A non-return valve ensures continuous safety of the load, even if pressure drops
- Excellent digging characteristics are the result of high closing forces
- Shells with width 280 mm / 11 in: reinforced version with 15 mm / 0.6 in strong Hardox side walls
- Strong and sturdy rotation with large 4-point bearing and 2 motors for a high torque of 5700 Nm

Excavator requirements
- Recommended operating weight: 13–18 ton
- Max pressure (open/close): 350 bar (5040 psi)
- Max pressure (rotate): 140 bar (2016 psi)
- Oil flow (open/close): 40 - max. 120 l/min (10.6 - max. 31.7 GPM)
- Oil flow (rotate): 25 - max. 45 l/min (6.6 - max. 11.9 GPM)

Accessories

KM 690 15t	adapter for rigid mounting - up to 15t / 33000 lbsr
KM 690 20t	adapter for rigid mounting - up to 20t / 44000 lbs
T650 rigid	bolt-on adapter for "Atlas" quick change T620
KSW10 rigid	bolt-on adapter for "System L-lock" KMS10/KHS10 for rigid mounting - up to 19t / 41800 lbs
KM 680 C18VE-Rail	scraper

Note: more attachments and other mounting options available on request

Product	Width E (mm/in)	Opening A (mm/in)	Height C max. (mm/in)	Volume (liters/c.y.)	Number of teeth	Capacity (kg/lbs)	Weight (kg/lbs)
C18VE-28-HD	280 / 11.0	1330 / 52.4	1655 / 65.2	60 / 0.08	3	4500 / 9900	780 / 1716

Package consists of: clamshell bucket, bolt-on teeth, KINSHOFER rotation, 2 welded eyes, shell exchange kit and non-return valve

+46 44 81707 | sales@rf-system.se | www.rf-system.se

Technical specification

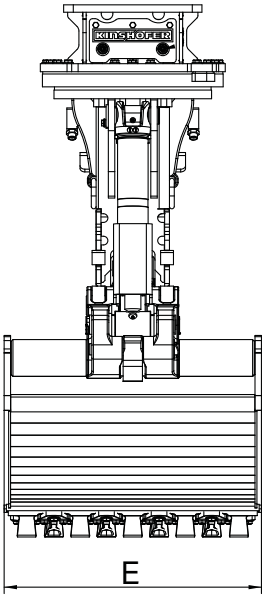

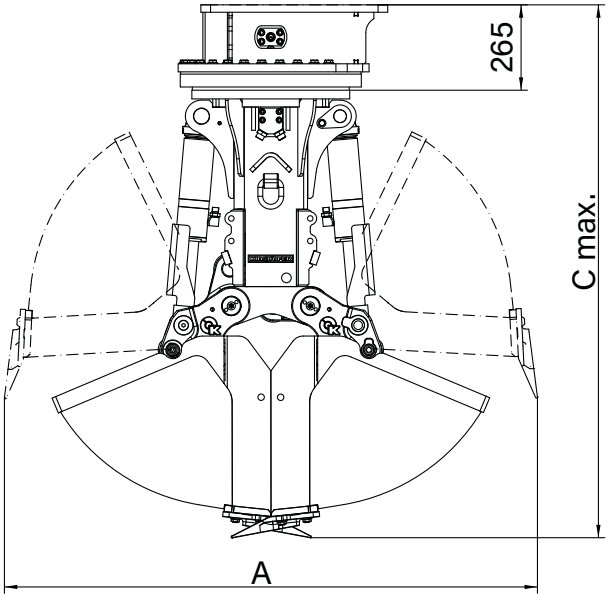

Kinshofer Shell Exchange System C18-VE

Robust grabs for excavators with revolutionary exchange system in a single device

As a new demand on the site arises the attachment can be exchanged and the new application cn commence. Easy remounting of shells for excavating, landscaping, laying pipes, logging, rail track handling etc.

Do you have any questions? Contact us!

Efficient
Only shells are exchanged

Fast and easy
Exchange of shells within 4 minutes

Compact design
Compact and robustr

More information

Features

- Efficiency: only the shells are replaced; exchange is possible with only one person
- Fastness: easy exchange of the lynch pin from the change-over system within 4 minutes, no hydraulic work necessary
- Robust shell bearing with coexisting change mechanism

Module

Rock tines

Excavating shells

Excavating shells railway

Pipe grab

Foundation shells

Timber times

Hay and forestry tines

Well shaft shells

+46 44 81707 | sales@rf-system.se | www.rf-system.se

Exchangeable Shells for C18VE

Exchangeable Shells for C18VE - rigid and cardanic mount

Shells are interchangeable and available in all widths. Fast exchange thanks to shell exchange aid kit.

PRODUCT	WIDTH (mm/in)	OPENING (incl. teeth) (mm/in)	TOTAL HEIGHT (mm/in)	VOLUME (liters/c.y.)	NUMBER OF TEETH	LOAD CAPACITY (kg/lbs)	CLOSING FORCES (kN/lbf)	WEIGHT shells only (kg/lbs)
Excavating Shells								
C18VE-28S-Rail	280 / 11.0	1330 / 52.4	1500 / 59	60 / 0.08	3	4500 / 9900	54 / 11880	150 / 330
C18VE-40S-Rail	400 / 15.7	1330 / 52.4	1500 / 59	100 / 0.13	3	4500 / 9900	54 / 11880	170 / 374
C18VE-50S-Rail	500 / 19.7	1330 / 52.4	1500 / 59	125 / 0.16	5	4500 / 9900	54 / 11880	185 / 407
C18VE-60S-Rail	600 / 23.6	1330 / 52.4	1500 / 59	150 / 0.19	5	4500 / 9900	54 / 11880	215 / 473
C18VE-80S-Rail	800/ 31.5	1330 / 52.4	1500 / 59	200 / 0.26	7	4500 / 9900	54 / 11880	265 / 583
C18VE-100S-Rail	1000 / 39.4	1330 / 52.4	1500 / 59	250 / 0.33	9	4500 / 9900	54 / 11880	315 / 693
Sleeper Grab Tines								
C18VE-50S RG	500 / 19.7	1250 / 49.2	1400 / 55.1	-	-	4500 / 9900	44 / 9680	130 / 286
Multi Purpose Tines								
C18VE-60S A	590 / 23.2	1660 / 65.4	1625 / 64.0	180 / 0.24	5	4500 / 9900	41 / 9020	340 / 748
Well Shaft Shells								
C18VE-97S WSG	Ø970 / 38.2	970 / 38.2	1410 / 55.5	110 / 0.14	5	4500 / 9900	65 / 14300	170 / 374

Note: larger shells available on request

Exchangeable Shells for C18VE - only cardanic mount

Rail Grab Tines								
C18VE-200S-RG2	2000 / 78.7	990 / 39	1295 / 51	-	-	4500 / 9900	68 / 14960	275 / 605
Hay and Forestry Tines								
A18VE-95S	955 / 37.6	1830 / 72	1685 / 66.3	400 / 0.52	-	4500 / 9900	41 / 9020	340 / 748
A18VE-122S	1220 / 48	1835 / 72.2	1725 / 67.9	600 / 0.78	-	4500 / 9900	32 / 7040	275 / 605
Timber Grab Tines								
T18VE-49S-0,5	490 / 19.3	1830 / 72	1825 / 71.9	0,50 m^2 / 0.33 cords		4500 / 9900	30 / 6600	200 / 440
T18VE-49S-0,6	490 / 19.3	1975 / 77.8	1905 / 75	0,60 m^2 / 0.40 cords		4500 / 9900	33 / 7260	220 / 484

Package consists of: Exchangeable shells, teeth (excavating and well shaft shells), exchange aid kit

Note: special shells available on request

View in action

Attachments / **Railway**

Road/Rail Trailer JVV

Versatile transport trailer for road and track

Road/Rail Trailer JVV is the perfect trailer for road/rail equipment and for transporting ballast, fill material and accessories. The trailer is equipped with wheels for both track and road, making it flexible for different working environments.

The height of the rubber wheels is hydraulically adjustable. Hydraulic brakes are fitted on both the rubber wheels and the track wheels. The trailer has a telescopic draw bar with adjustable height, anchoring loops and post holes in the trailer bed, making it easy and safe to use. It is equipped with lights and approved for driving on regular roads.

Do you have any questions? Contact us!

Flexible
High flexibility for both road and track

Safe handling
Hydraulic brakes

Transport
Can transport ballast, fill material and accessories

Adjustable
Foldable and removable side panels

More information

Features
- Hydraulically adjustable height of rubber wheels
- Hydraulic brakes on rubber wheels and track wheels
- Telescopic draw bar with adjustable height
- Anchoring loops and post holes in the trailer bed
- Equipped with lights
- Emergency and parking brake (track wheels)
- Fold-down and removeable back and side panels

Detailed description
- Weight: 3300 kg
- Width: 2485 mm
- Length: 5700 mm (loading length 5000 mm)
- Bed height: 620 mm
- Max load: 16 ton on track, 8 ton on road
- Max permitted speed: 20 km/h

Machine requirements
- Pressure: max 200 bar (2900 psi), min 70 bar (1015 psi)

Product	Item number	Length (mm)	Width (mm)	Loading length (mm)	Max load road (t)	Max load railway (t)	Bed height (mm)	Rail wheels Ø (mm)	Weight (kg)
JVV	351-08000-000-00	5700	2485	5000	8 t	16 t	620	450	3300

+46 44 81707 | sales@rf-system.se | www.rf-system.se

Product description and accessories

1. Rail wheels
2. Rubber wheels
3. Back panel
4. Side panel
5. Front
6. Telescopic draw bar
7. Life guard
8. Hydraulic connections
9. Anchoring loops
10. Tow hook

Technical specification

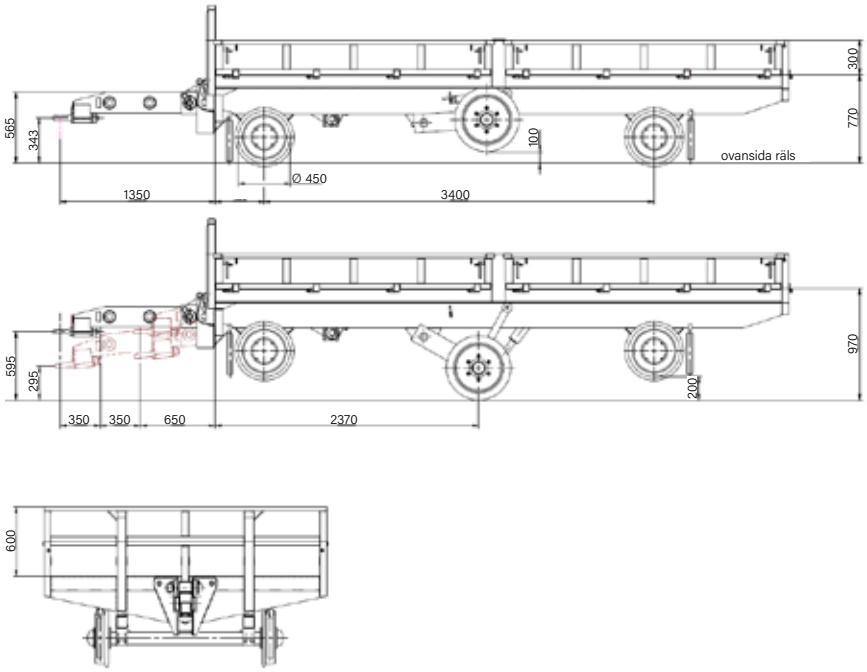

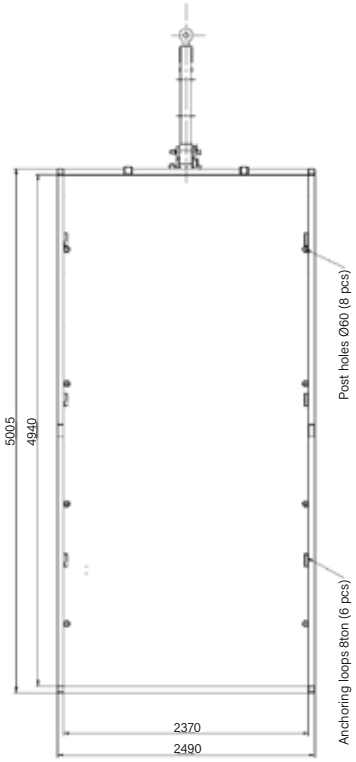

We stand for innovation & experience

- Continual product development
- Leading technical skills
- Innovative solutions
- New applications
- Developing our markets
- A forward-looking partner
- Benefit to our customers, society and the world

ABOUT US

Driven by innovation

At RF we constantly innovate and develop our products according to our customers' needs. We systematically take great strides to stay at the forefront.

We are both local and global at the same time - our products are manufactured in our production facility and with carefully selected subcontractors, which means we have full control over every nut and bolt while being part of a large international group that allows our customer to purchase all their products from one supplier.

In addition, we have a well-known and accessible after-sales service and an extensive spare parts inventory, allowing you to use your favourite products for as long as you want.

MaskinLeverantörerna

RF-SYSTEM AB is a member of the Swedish trade association 'Maskinleverantörerna' (Mobile machines suppliers).
We follow European and Swedish standards

Follow us on social media

+46 44 81707 | sales@rf-system.se | www.rf-system.se

Contact

RF-System AB
Sösdala 1112
S-282 72 Sösdala, Sweden
Tel: +46 (0)44 817 07
Email: sales@rf-system.se
www.rf-system.se

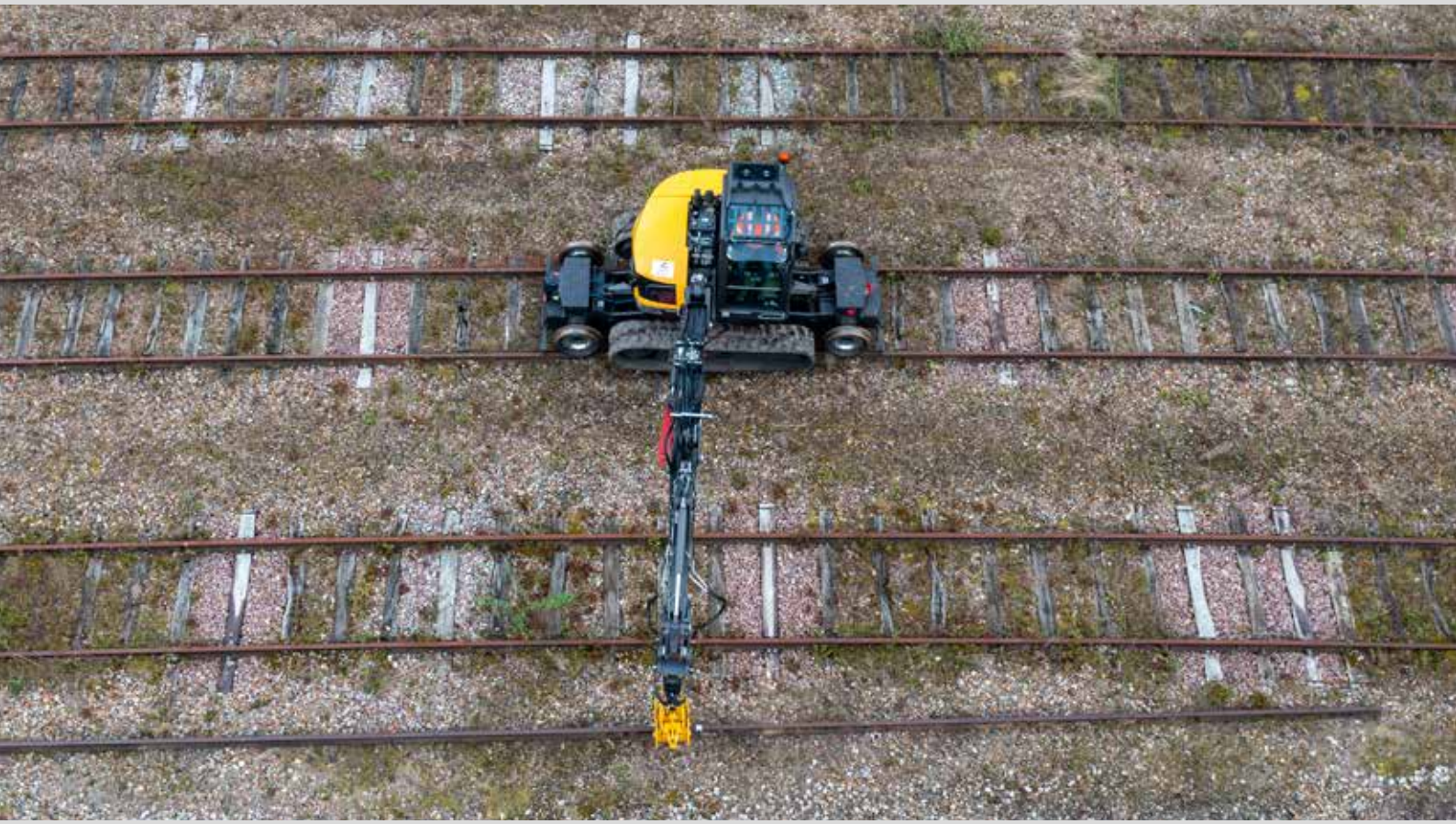

KINSHOFER
GROUP COMPANY

RF-System AB, Sösdala 1112, SE-282 72 Sösdala, Sweden
+46 44 81707 ▪ sales@rf-system.se ▪ www.rf-system.se