Strength and efficiency

The hydraulic breaker is mainly used in earth-moving and mining industries, where components are subjected to high levels of stress, working mostly in difficult situations.

To make hydraulic breakers increasingly reliable and to guarantee both performance and power, Hammer has introduced the SB and FX lines, obtained thanks to in-depth R&D carried out throughout the years.

For the production of this equipment, top-quality alloy steels are used and the best heat treatment techniques developed.

The research and studies carried out have allowed us to obtain important results in terms of the technological and mechanical characteristics of the steels.
At the same time, studies were carried out in collaboration with the main producers of hydraulic seals (Trelleborg, Freudenberg, Nok).

Over the years we have therefore improved both quality and type of the materials used to reach the appropriate ratio between different speeds, pressures and temperatures, thus increasing durability.



SB
60 - 520 KG

FX
700 -11000 KG

We’re always ready for challenges

Breakers of both SB and FX series are “nitrogen” breakers. Hammer, thanks to its experience, followed this path in order to obtain high power distributed over a higher number of blows per minute, thus resisting high counterpressures (up to 435 psi).
The breaker is also very compactly structured hence reducing stress on the excavator’s arm and ensure greater durability of both the breaker and its components.

• The SB and FX hydraulic breakers can work on any type of excavator and on any single-acting hydraulic system; they are also suitable for hydraulic systems with high back pressure

• Hammer Breakers are equipped with special polyurethane shock absorbers that absorb vibrations, thus protecting the arm of the excavator and also reducing noise emissions, according to the requirements of directive 2000/14 / EC

While the SB series is suitable for carriers, mini excavators, miniblades, backhoe loaders, demolition robots. etc., the FX series is suitable for crawler and wheeled excavators of medium and large size.

Application overview

			SB	FX 700-1900	FX 2200-12000
Mining & Quarrying	Preliminary works	Overburden removal	✪	✪	★
		Bench, road & ramp leveling			
		Roof, face & rib scaling			
	Secondary breaking	Boulder reduction in rock pile	★	✪	✪
		Removing blockages at crushing systems			
	Primary rock breaking	Selective rock breaking	☆	★	✪
		Blast-free mining			
Demolition & Renovation	Masonry structures	Brickwork	✪	★	☆
		Natural stone			
		Autoclaved aerated concrete			
	Concrete structures	Lightweight concrete	✪	✪	★
		Standard concrete			
		Heavyweight concrete	☆	★	✪
	Composite steel & concrete structures	Steel-reinforced concrete	★	✪	✪
		Prestressed concrete			
		Fiber-reinforced concrete			
	Pavements	Asphalt	✪	✪	✪
		Concrete			
		Composite surfaces			
Construction	Earthworks	Trenching	★	✪	✪
		Pit building			
		Ground excavation			
	Tunneling	Tunnel driving	★	✪	✪
		Roof, face & rib scaling			
		Floor leveling			
	Dredging	Canal deepening & extension	★	★	✪
		Dock deepening & extension			
	Gardening & Landscaping	Fencing	✪	★	☆
		Ground excavation			
		Rock breaking			
	Foundation works	Ground leveling	☆	★	✪
	Building construction	Foundation pile driving	☆	★	✪
Metallurgical Industry	Slag recycling	Boulder reduction in slag heap	★	✪	✪
		Removing blockages at crushing systems			
	Cleaning & debricking	Ladles	✪	★	☆
		Converter mouths			
		Kilns			

✪ Optimal ★ Suitable ☆ Unsuitable

BREAK IN A SMART WAY

Monobloc hydraulic breaker without tie rods and diaphragm

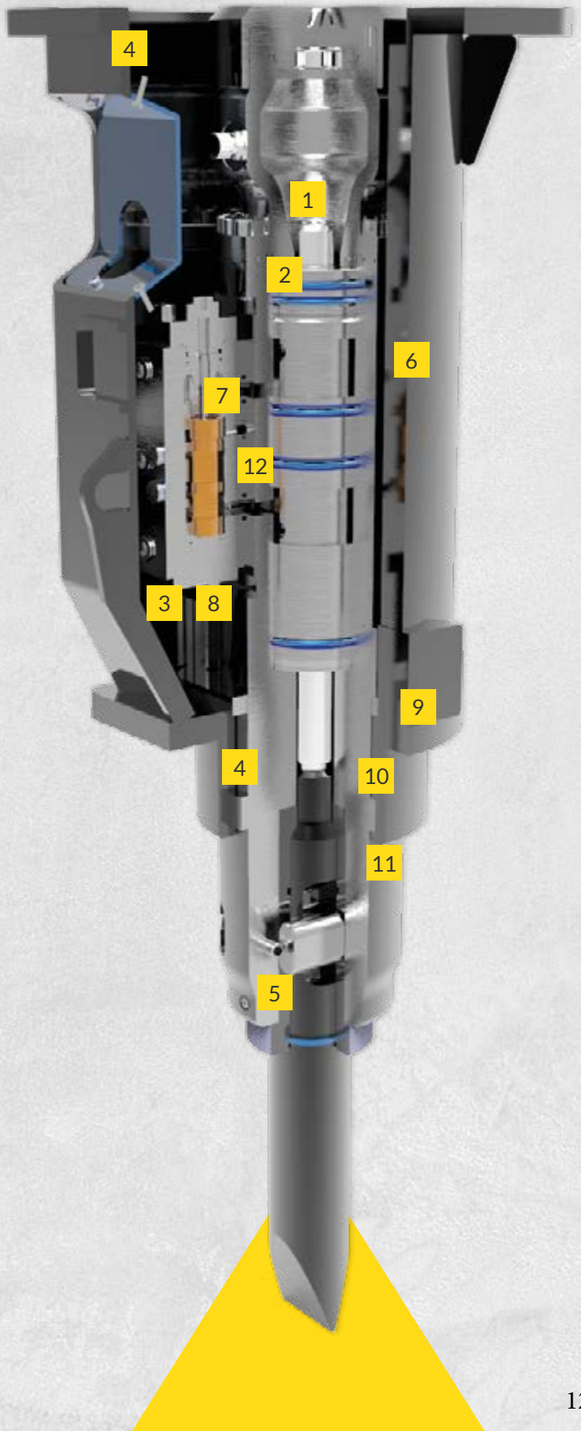

1 More power, less vibration and maintenance.
The SB breakers work with inertial nitrogen energy recovery, thus obtaining more power (more than 30%) and less vibration thanks to the nitrogen chamber that reduces maintenance costs, since it has no diaphragm.

2 Long lasting nitrogen charge.
In the past, energy recovery breakers required frequent nitrogen refills; with the new sealing system and the new compound developed by Freudenberg they are able to guarantee a gas tightness equal to 300% more than in the past.

3 Protected tubes.
The tubes are completely protected through the casing and they're suitable for every type of excavation, especially in narrow spaces.

4 The particular design, with a closed box casing as well as the addition of sound-absorbing material, allowed the breaker to
have very low noise levels

5 Double retainer pin.
The tool-locking system with a double retainer pin allows adequate and uniform wear of the same and ensures longer maintenance intervals for the whole locking system.

6 Monobloc body without tie rods.
The entire SB series benefits from the particular monoblock construction; this feature gives the structure a very high resistance to leverage, during work. The breaker is built in one only piece and it is without tie rods, thus obtaining greater production and less maintenance as a result.

7 Only two moving parts.

8 For all types of installations (pressurization).
The SB series tolerates high back pressure, and it has a wide calibration range of the required oil flow, in order to make the installation easier.

9 The piston moves in a single interchangeable cylinder liner that keeps the main body intact and that is easy to replace in case of necessity.

10 The piston is built with a special geometry as to keep a constant energy of impact, and to reduce damage in any critical condition.

11 Visibility and versatility.
The models of the SB series, with their tapered shape, provide the operator with an excellent view during the work and allow to operate close to the walls, both in narrow and wide spaces.

12 Hydraulic system for blank firings.
The hydraulic system creates a regenerative oil circuit that preserves the breaker from blank firings when the tool is not in contact with the rock.

EFFICIENCY BECOMES POWER

Hammer Hydraulic Breakers

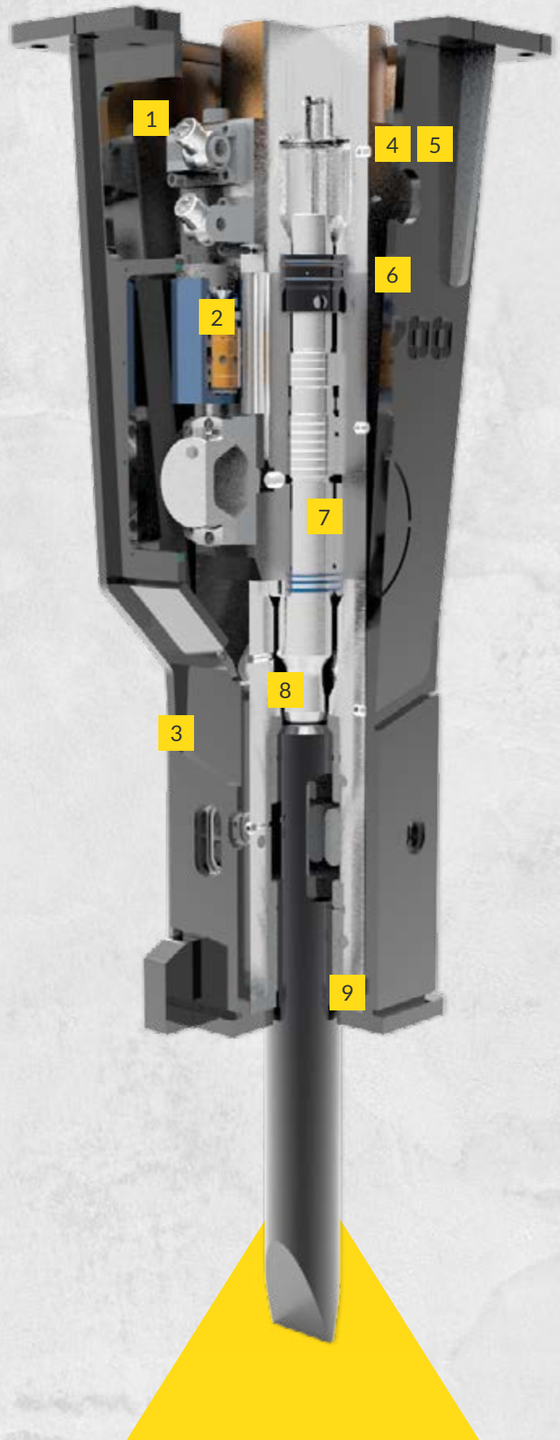

1 Tubes with swivels.
Tubes with swivels are fully protected from any misuse and, resistant to vibrations.

2 Operating pressure regulation.
For the FX series (FX950-12000), it is possible to adjust the working pressure with a manual valve located frontally on the distribution box.

3 Anti-dust and underwater work setup
You can prevent the entry of dust and water into the breaker by blowing air into the proper hole in the front part of the breaker, with a pressure of not less less than 10 bar.

4 Automatic hydraulic greasing device (optional, mounted on the breaker).
The Beka-Lube automatic lubrication system optimizes the lubrication procedure and reduces maintenance and downtimes

5 Automatic hydraulic greasing device with exclusive Hammer electric control (optional, mounted on the excavator). Innovative electric system with automatic grease distribution, less liable to vibration breakages thanks to its tank of grease with a capacity of 4 kg or 8 kg, making thus the system cheaper than all the other devices with single cartridges.

6 Manual blows adjustment.
For the FX series (FX950-FX12000), the regulation of the blows is carried out manually by a valve located on the side of the breaker.

7 Hydraulic system for blank firings.
The hydraulic system creates a regenerative oil circuit that preserves the breaker from blank firings when the tool is not in contact with the rock.

8 The piston is built with a special geometry as to keep a constant energy of impact, and to reduce damage in any critical condition.

9 Anti-dust system for tunnels (optional).
The anti-dust system consists of a dustproof seal addition mounted in the lower bush to avoid the entry of impurities into the circuit. FX series breakers are suitable for secondary demolition work, excavations in quarry, work in urban areas, tunnels, pipelines, and railway tunnels and,
concerning the biggest models, demolitions in open pit mining.

SB-SQ SERIES

HYDRAULIC BREAKERS WITHOUT TIE RODS

for excavators from **0.5** to **13 ton**

Break in a smart way!

More power / less vibrations and maintenance.
Long lasting nitrogen charge.
Protected tubes.
Silenced body.
Monobloc body without tie rods.
Double retainer pin.
Only two moving parts.
For all types of installations.
Visibility and versatility.

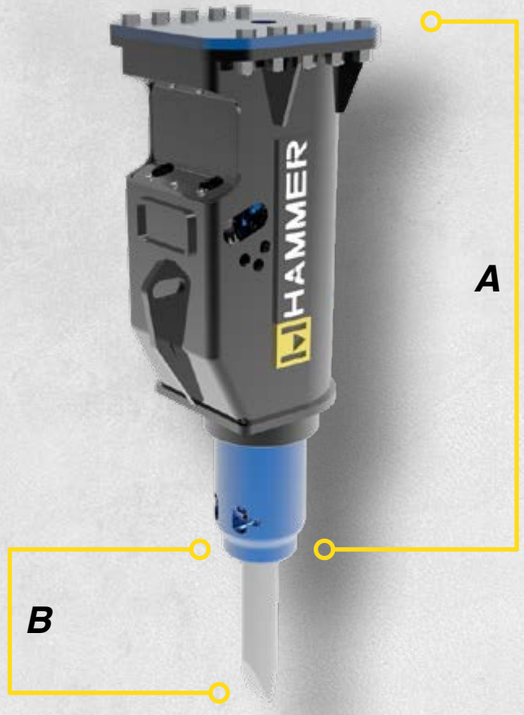

Mining & Quarring

Demolition & Renovation

Metallurgic Industry

Construction

Recycling



BLUNT TOOL
Suitable for reinforced concrete and very compact rocks.



PYRAMID TOOL
Suitable for reinforced concrete and very compact rocks.



CHISEL TOOL
Suitable for medium-hard and layered rocks.



MOIL POINT
Suitable for concrete, medium-hard and not layered rocks.



PILE DRIVER
Suitable for planting wooden or concrete poles.



WOOD CUTTER TOOL
Suitable for cutting all types of wood.



ASPHALT CUTTER
Suitable for cutting asphalt.

Models		SB55	SB70	SB100	SB150	SB200	SB250	SB300	SQ380	SQ520
Carrier weight	*t*	0.5-1.4	0.5-1.6	1.2-2.5	1.5-3.8	2.5-5	3-6.5	4.5-8.5	5-10	7-13
Weight	*kg*	60	70	100	135	190	240	280	350	500
Body height (A)	*mm*	583	583	666	666	869	869	904	1000	1150
Tool height (B)	*mm*	200	228	255	255	275	300	295	385	430
Tool diameter	*mm*	40	40	45	48	55	65	74	77	85
Required oil supply	*l/min*	15-20	18-23	20-30	22-40	25-55	30-60	50-70	50-80	65-90
Oil hammer pressure	*bar*	110	110	110	110	130	140	160	160	170
Blows per minute	*/min*	800-1700	800-1750	800-2300	800-2000	900-1900	850-1800	600-1500	500-1150	400-1000
Energy per blow	*j*	250	280	400	580	750	950	1200	1600	2400
Max. Back pressure	*bar*	30	30	30	30	30	30	30	30	30
Inner diam. in hose	*inch*	1/2”	1/2"	1/2”	1/2”	1/2"	1/2"	3/4”	3/4”	3/4”
Inner diam. out hose	*inch*	1/2”	1/2"	1/2”	1/2”	1/2"	1/2"	3/4”	3/4”	3/4”

All illustrations and numerical data in this catalog are purely indicative and subject to change at our discretion and without notice. We therefore reserve the right to modify them with a view to improving and continuously developing our product.

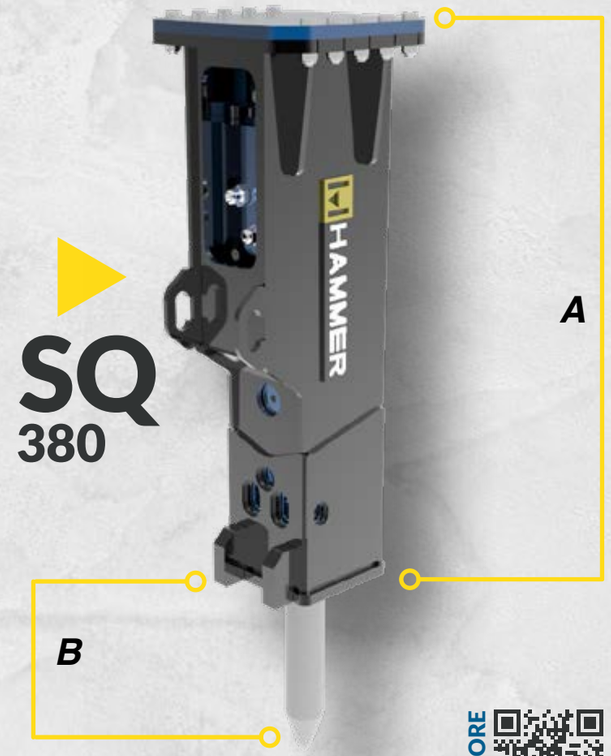

SQ 380

SEE MORE

FX
SERIES

HAMMER
HYDRAULIC BREAKERS

for excavators from **9** to **170 ton**

Efficency becomes power!

Tubes with swivels fully protected.
Operating pressure adjustment.
Anti-dust and underwater work setup.
Automatic hydraulic greasing device.
Hydraulic system for blank firings.
Manual blow adjustment.
Anti-dust system for tunnels.





AUTOMATIC HYDRAULIC GREASING DEVICE

Optional mounted on the breaker*
The Beka-Lube automatic lubrication system optimizes the lubrication procedure and reduces maintenance and downtimes.

Mining & Quarring

Demolition & Renovation

Metallurgic Industry

Construction

Recycling



MOIL POINT
Suitable for concrete, medium-hard and not layered rocks.



PYRAMID TOOL
Suitable for reinforced concrete and very compact rocks.



CHISEL TOOL
Suitable for medium-hard and layered rocks.



BLUNT TOOL
Suitable for reinforced concrete and very compact rocks.



COBRA TOOL
Suitable for quarry works, such as primary demolition and reduction of stone blocks.

Models		FX700	FX800	FX950	FX1300	FX1700	FX1900	FX2200
Carrier weight	*t*	9-13	10 -15	11-16	13-19	18-24	22-26	23-29
Weight	*kg*	700	850	950	1200	1650	1850	2200
Body height (A)	*mm*	1310	1320	1390	1470	1670	1790	1840
Tool height (B)	*mm*	430	550	550	560	620	725	720
Tool diameter	*mm*	95	105	115	120	135	140	150
Required oil supply	*l/min*	70-100	80-110	90-120	110-140	130-160	140-180	165-190
Oil hammer pressure	*bar*	160	165	165	170	180	180	180
Blows per minute	*/min*	600-900	600-900	600-900	400-900	400-800	400-800	400-800
Energy per blow	*j*	2000	2500	2600	3200	4200	4700	5400
Max. Back pressure	*bar*	25	25	25	25	25	25	25
Inner diam. in hose	*inch*	3/4"	1"	1"	1"	1"	1"	1"
Inner diam. out hose	*inch*	3/4"	1"	1"	1"	1"	1"	1"

All illustrations and numerical data in this catalog are purely indicative and subject to change at our discretion and without notice. We therefore reserve the right to modify them with a view to improving and continuously developing our product.

SEE MORE

FX
SERIES

HAMMER
HYDRAULIC BREAKERS

for excavators from **9** to **170 ton**

Efficency becomes power!

Tubes with swivels fully protected.
Operating pressure adjustment.
Anti-dust and underwater work setup.
Automatic hydraulic greasing device.
Hydraulic system for blank firings.
Manual blow adjustment.
Anti-dust system for tunnels.





AUTOMATIC HYDRAULIC GREASING DEVICE

Optional mounted on the breaker*
The Beka-Lube automatic lubrication system optimizes the lubrication procedure and reduces maintenance and downtimes.

Mining & Quarring
Demolition & Renovation
Metallurgic Industry
Construction
Recycling



MOIL POINT
Suitable for concrete, medium-hard and not layered rocks.



PYRAMID TOOL
Suitable for reinforced concrete and very compact rocks.



CHISEL TOOL
Suitable for medium-hard and layered rocks.



BLUNT TOOL
Suitable for reinforced concrete and very compact rocks.



COBRA TOOL
Suitable for quarry works, such as primary demolition and reduction of stone blocks.

Models		FX3000	FX4000	FX5000	FX8000	FX12000
Carrier weight	*t*	30-35	36-47	42-57	60-100	85-170
Weight	*kg*	3000	4000	4800	7300	11000
Body height (A)	*mm*	2030	2250	2300	3700	4440
Tool height (B)	*mm*	710	790	790	800	760
Tool diameter	*mm*	160	180	195	215	255
Required oil supply	*l/min*	180-250	250-300	270-320	380-440	480-570
Oil hammer pressure	*bar*	180	180	190	190	190
Blows per minute	*/min*	350-700	300-650	350-700	200-400	150-300
Energy per blow	*j*	9000	12000	13500	23000	28000
Max. Back pressure	*bar*	25	25	25	30	30
Inner diam. in hose	*inch*	1”	1”	1" 1/4	1" 1/4	1" 1/4
Inner diam. out hose	*inch*	1” 1/4	1” 1/4	1" 1/4	1" 1/4	1" 1/4

All illustrations and numerical data in this catalog are purely indicative and subject to change at our discretion and without notice. We therefore reserve the right to modify them with a view to improving and continuously developing our product.

SEE MORE